I den här katalogen hittar du delar till våra Parsun-motorer



BOAT-parts.se

DESPIECE MOTORES
PARTS CATALOGUE
ESPLOSI MOTORI



F6A / F5A PAG 4

BANDEJA Y TAPA MOTOR / BOTTON & TOP COWLING / BASE E COPPERCHIO CALANDRA 4
ARRANQUE / STARTER / AVVIAMENTO 5
BLOQUE / CRANKACASE / BLOCCO 5
CULATA / CYLINDER HEAD / TESTATA 6
DISTRIBUCIÓN / CAMSHAFT / DISTRIBUZIONE 6
CIGÜEÑAL Y PISTONES / CRANKSHAFT & PISTON / ALBERO MOTORE E PISTONE 7
BOMBA COMBUSTIBLE / FUEL SYSTEM / POMPA BENZINA 7
ADMISIÓN / INTAKE / ASPIRAZIONE 8
DIRECCIÓN / STEERING / STERZO 9
CARBURADOR / CARBURETOR / CARBURATORE 10
ELECTRICIDAD / ELECTRICAL / PARTE ELETTRICA 10
COLA SUPERIOR / UPPER CASING / PARTE ALTA PIEDE 11
CAMBIO / CONTROL SYSTEM / CALANDRA 11
SOPORTE MOTOR / BRACKET / SUPPORTE MOTORE 12
COLA INFERIOR / LOWER CASING / PARTE INFERIORE PIEDE 12



F20A / F15A PAG 14

TAPA MOTOR / TOP COWLING / COPPERCHIO CALANDRA 14
ARRANQUE / STARTER / AVVIAMENTO 14
BANDEJA MOTOR / BOTTON COWLING / BASE CALANDRA 15
CAMBIO / CONTROL SYSTEM / CALANDRA 16
BLOQUE / CRANKACASE / BLOCCO 17
CULATA / CYLINDER HEAD / TESTATA 18
CIGÜEÑAL Y PISTONES / CRANKSHAFT & PISTON / ALBERO MOTORE E PISTONE 18
VÁLVULA / VALVE / VALVOLA 19
DISTRIBUCIÓN / CAMSHAFT / DISTRIBUZIONE 19
BOMBA COMBUSTIBLE / FUEL SYSTEM / POMPA BENZINA 20
ADMISIÓN / INTAKE / ASPIRAZIONE 20
CARBURADOR / CARBURETOR / CARBURATORE 21
ELECTRICIDAD / ELECTRICAL / PARTE ELETTRICA 22
DIRECCIÓN / STEERING / STERZO 24
SOPORTE MOTOR / BRACKET / SUPPORTE MOTORE 25
COLA SUPERIOR / UPPER CASING / PARTE ALTA PIEDE 26
COLA INFERIOR / LOWER CASING / PARTE INFERIORE PIEDE 28
CAJA DE MANDOS / CONTROL BOX / SCATOLA COMANDI 29

BOAT-parts.se



F40FWL-T PAG 32

TAPA MOTOR / TOP COWLING / COPPERCHIO CALANDRA 32
BANDEJA MOTOR / BOTTON COWLING / BASE CALANDRA 33
ARRANQUE / STARTER / AVVIAMENTO 34
CAMBIO / CONTROL SYSTEM / CALANDRA 35
BLOQUE / CRANKACASE / BLOCCO 37
CULATA / CYLINDER HEAD / TESTATA 38
CIGÜEÑAL Y PISTONES / CRANKSHAFT & PISTON / ALBERO MOTORE E PISTONE 39
VÁLVULA / VALVE / VALVOLA 39
BOMBA COMBUSTIBLE / FUEL SYSTEM / POMPA BENZINA 40
ADMISIÓN / INTAKE / ASPIRAZIONE 41
CARBURADOR / CARBURETOR / CARBURATORE 42
ELECTRICIDAD / ELECTRICAL / PARTE ELETTRICA 44
DIRECCIÓN / STEERING / STERZO 47
SOPORTE MOTOR / BRACKET / SUPPORTE MOTORE 48
COLA SUPERIOR / UPPER CASING / PARTE ALTA PIEDE 51
COLA INFERIOR / LOWER CASING / PARTE INFERIORE PIEDE 52
CARTER / OIL PAN / COPPA LO'OLLIO 55
CAJA DE MANDOS / CONTROL BOX / SCATOLA COMANDI 56
BOMBA DE ACEITE / OIL PUMP / POMPA OLIO 58
DEPÓSITO EXTEIOR / OUTER FUEL TANK / SERBATOIO ESTERNO 58
BOMBA ACEITE ELÉCTRICA / ELECTRIC OIL PUMP / POMPA OLIO ELETTRICA 59
POWER TRIM & TILT 60
CIRCUITO COMBUSTIBLE / FUEL COMMON RAIL / COMBUSTIBILE 61



F50FWL-T / F60FWL-T PAG 63

TAPA MOTOR / TOP COWLING / COPPERCHIO CALANDRA 63
VARILLA ENLACE / LINK ROD / ASTICELLA DI UNIONE 63
BANDEJA MOTOR / BOTTON COWLING / BASE CALANDRA 64
COLA SUPERIOR / UPPER CASING / PARTE ALTA PIEDE 65
CAMBIO / CONTROL SYSTEM / CALANDRA 66
BLOQUE / CRANKACASE / BLOCCO 67
CULATA / CYLINDER HEAD / TESTATA 68
CIGÜEÑAL Y PISTONES / CRANKSHAFT & PISTON / ALBERO MOTORE E PISTONE 68
BOMBA COMBUSTIBLE / FUEL SYSTEM / POMPA BENZINA 69
SOPORTE MOTOR / BRACKET / SUPPORTE MOTORE 70
ADMISIÓN / INTAKE / ASPIRAZIONE 71
ELECTRICIDAD / ELECTRICAL / PARTE ELETTRICA 72
COLA INFERIOR / LOWER CASING / PARTE INFERIORE PIEDE 74
CAJA DE MANDOS / CONTROL BOX / SCATOLA COMANDI 76
CARTER / OIL PAN / COPPA LO'OLLIO 77
BOMBA ACEITE ELÉCTRICA / ELECTRIC OIL PUMP / POMPA OLIO ELETTRICA 78
BOMBA DE ACEITE / OIL PUMP / POMPA OLIO 79
DEPÓSITO EXTEIOR / OUTER FUEL TANK / SERBATOIO ESTERNO 80
CIRCUITO COMBUSTIBLE / FUEL COMMON RAIL / COMBUSTIBILE 80
TILT HIDRÁULICO / HYDRAULIC TILT / TILT IDRAULICO 81
VÁLVULA / VALVE / VALVOLA 83

BOAT-parts.se



F6A / F5A

TAPA MOTOR / TOP COWLING ASSY / COPPERCHIO CALANDRA

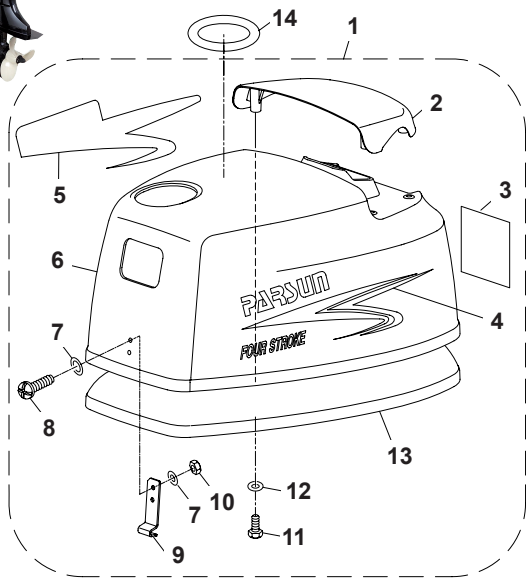

Nº	Ref.	Description	Quanty
1	**PAF6-06000000**	TOP COWLING ASSY	1
2	**PAF6-06000004**	COVER, TOP COWLING	1
3	**PAF8-08000008**	MARK 6	1
	PAF4-08000005	MARK 5	
4	**PAF15-12000001**	LEFT MARK	1
5	**PAF15-12000002**	RIGHT MARK	1
6	**PAF6-06000001**	TOP COWLING	1
7	**PAGB/T97.1-5**	WASHER 5	4
8	**PAGB/T818-M5x14**	SCREW, PAN HEAD M5x14	2
9	**PAT36-06000003**	FRONT POTHOOK	1
10	**PAGB/T6170-M5**	NUT M5	2
11	**PAGB/T5783-M6x20**	BOLT M6x20	4
12	**PAGB/T97.1-6**	WASHER 6	4
13	**PAF6-06000002**	SEAL	1
14	**PAF4-08000019**	MARK 19	1

BANDEJA / BOTTOM COWLING / BASE CALANDRA

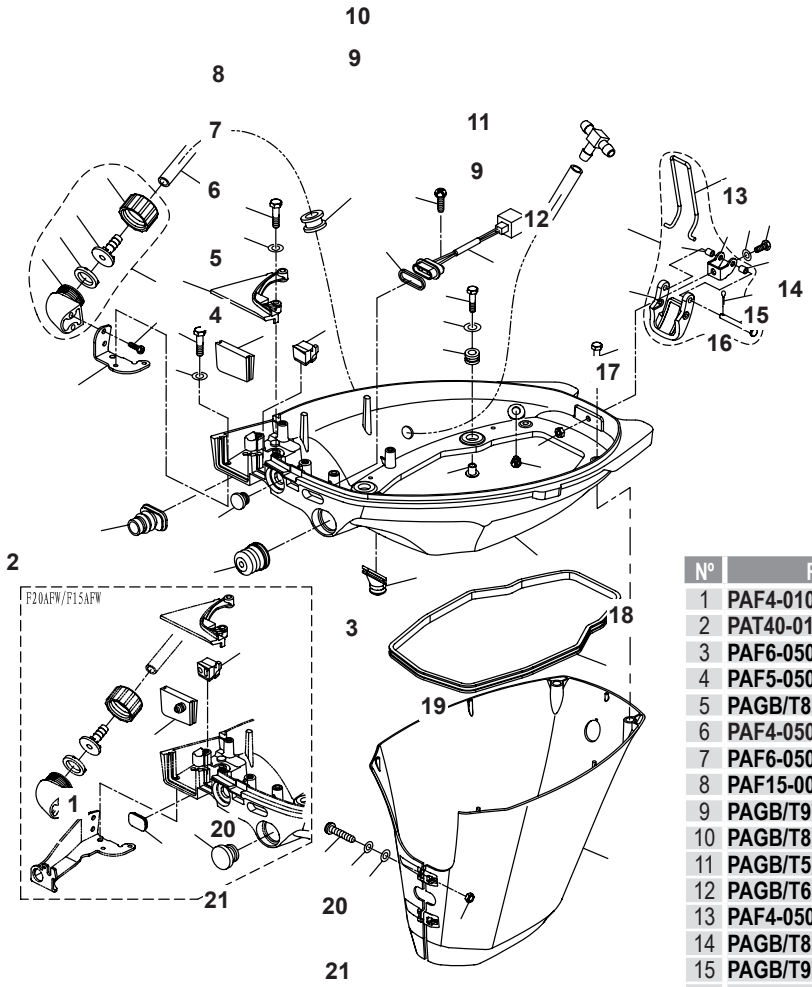

Nº	Ref.	Description	Quanty
1	**PAF4-01090401**	STOPPER, HANG ROPE ASSY	1
2	**PAT40-01020101**	ENGINE STOP SWITCH ASSY	1
3	**PAF6-05000001**	BOTTOM COWLING	1
4	**PAF5-05000102**	PLUG, RUBBER	1
5	**PAGB/T818-M4x12**	SCREW M4x12	1
6	**PAF4-05000101**	KNOP, OIL SWITCH	1
7	**PAF6-05000100**	OIL SWITCH ASSY	1
8	**PAF15-00000006**	PIN Ø6x12	1
9	**PAGB/T97.1-6**	WASHER 6	5
10	**PAGB/T818-M6x12**	SCREW M6x12	1
11	**PAGB/T5783-M6x20**	BOLT M6x20	4
12	**PAGB/T6170-M8**	NUT M8	2
13	**PAF4-05000023**	LOCKING HOOK	1
14	**PAGB/T818-M5x16**	SCREW M5x16	1
15	**PAGB/T97.1-5**	WASHER 5	1
16	**PAF4-05000020**	SEAT, LOCKING HOOK	1
17	**PAGB/T889.1-M5**	LOCKING NUT M5	1
18	**PAF5-05000013-2**	COVER, RUBBER	1
19	**PAF6-05000009**	HANDLE	1
20	**PAGB/T97.1-8**	WASHER 8	2
21	**PAF25-01010303**	BOLT M8x20	2

BOAT-parts.se

ARRANQUE / STARTER ASSY / AVVIAMENTO

Nº	Ref.	Description	Quanty
1	PAF6-05000010	TIGHTWIRE, DETENT	1
2	PAF6-04070000	STARTER ASSY	1
3	PAF6-04070001	CASING, STARTER	1
4	PAF4-04130009	DETENT	1
5	PAF4-04130010	WREST SPRING, DETENT	1
6	PAGB/T5783-M6x20	BOLT M6x20	1
7	PAGB/T97.1-6	WASHER 6	3
8	PAGB/T5783-M6x35	BOLT M6x35	2
9	PAF4-04130013	MEATUS, START ROPE	1
10	PAF6-04070003	ABSORBER, RUBBER	1
11	PAF4-04130101	HANDLE, STARTER	1
12	PAF4-04130102	COVER, STARTER HANDLE	1
13	PAF4-04130100	STARTER HANDLE ASSY	1
14	PAF4-04130011	WIRE, STARTER	1
15	PAF4-04130014	WASHER, THRUST	1
16	PAF4-04130005	SPRING, VOLUTE	1
17	PAF4-04130019	WHELL, START-UP	1
18	PAF4-04130004	SPRING, DRIVE	2
19	PAF4-04130003	PAWL, DRIVE	2
20	PAF4-04130007	SPRING, PLATE	1
21	PAF4-04130006	PLATE, PRELL	1
22	PAF4-04130008	BOLT, STARTER	1

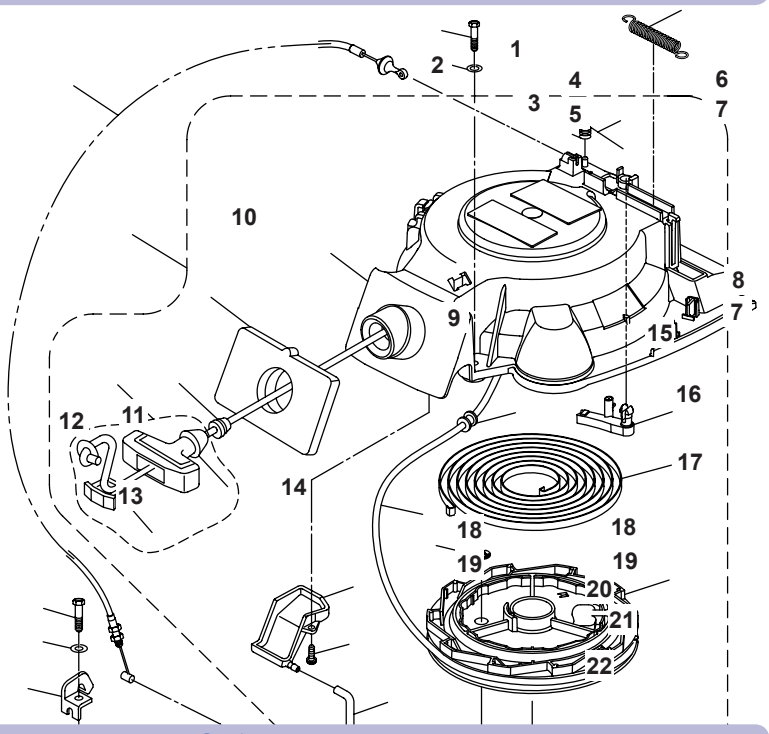

BLOQUE / CRANKCASE / BLOCCO

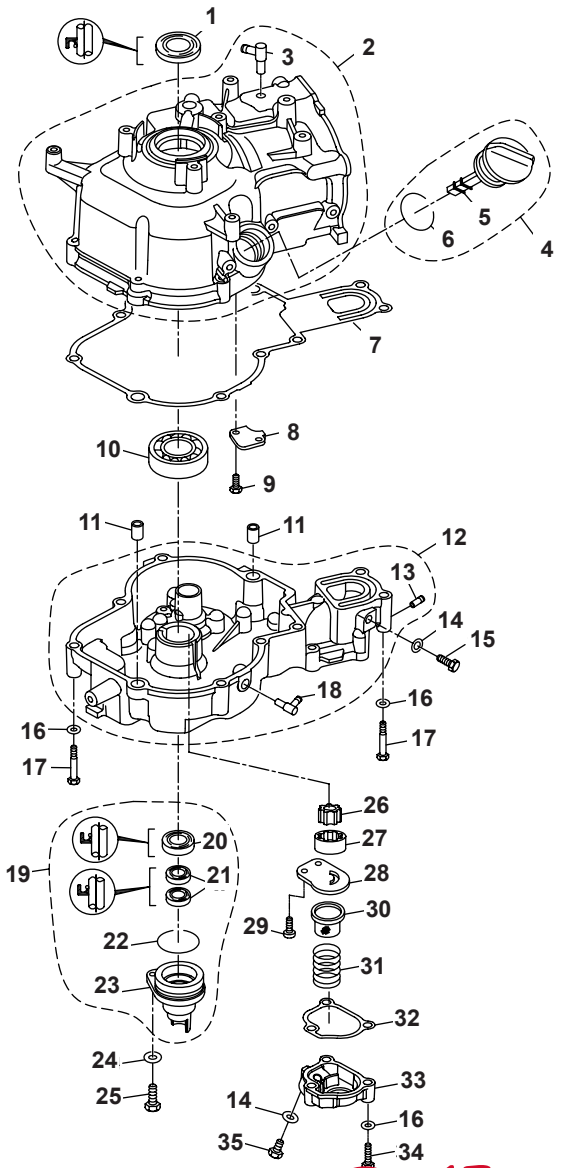

Nº	Ref.	Description	Quanty
1	PAF4-04010004	OIL SEAL	1
2	PAF6-04010100	CRANK CASE ASSY	1
3	PAF8-05000700	GAS NIPPLE ASSY	1
4	PAF4-04000010	PLUG WITH DIPSTICK ASSY	1
5	PAF4-04000007	PLUG WITH DIPSTICK	1
6	PAF4-04000008	O-RING	1
7	PAF6-04000001	COMPLEX GASKET, CRANKCASE	1
8	PAF6-04010004	OIL BAFFLE PLATE	1
9	PAGB/T5783-M5x10	BOLT M5x10	2
10	PANTN 6205C3	BEARING 6205C3	1
11	PAF4-04000003	HOLLOW PIN Ø10x8.4x14	2
12	PAF6-04040100	COVER, CRANK CASE	1
13	PAF4-04010102	GAS NIPPLE	1
14	PAF4-04000006	WASHER	2
15	PAGB/T5783-M8x14	BOLT M8x14	1
16	PAGB/T97.1-6	WASHER 6	13
17	PAT6-05000021	BOLT M6x50	10
18	PAF15-04000005	WATER NIPPLE	1
19	PAF4-04060000	OIL SEAL SHELL ASSY	1
20	PAF2.6-04010001	OIL SEAL 20x30x7	1
21	PAF4-04060004	OIL SEAL 10.8x21x7	2
22	PAGB/T3452.1-Ø32.5xØ1.8	O-RNG Ø32.5xØ1.8	1
23	PAF4-04060001	SHELL, OIL SEAL	1
24	PAGB/T97.1-8	WASHER 8	1
25	PAGB/T5783-M8x20	BOLT M8x20	1
26	PAF6-04040002	INNER ROTOR, OIL PUMP	1
27	PAF6-04040003	OUTER ROTOR, OIL PUMP	1
28	PAF6-04040004	COVER BOARD, OIL PUMP	1
29	PAGB/T818-M6x10	BOLT M6x10	2
30	PAF6-04040006	STRAINER, OIL PUMP	1
31	PAF6-04040007	SPRING, OIL PUMP	1
32	PAF6-04040005	GASKET, OIL PUMP	1
33	PAF6-04040008	COVER, OIL PUMP	1
34	PAGB/T5783-M6x35	BOLT M6x35	3
35	PAF6-04040009	BOLT	1

RECAMBIOS MARINOS S.L.

BOAT-parts.se

CULATA / CYLINDER HEAD / TESTATA

Nº	Ref.	Description	Quanty
1	PAGB/T5783-M6x20	BOLT M6x20	8
2	PAGB/T97.1-6	WASHER 6	8
3	PAF4-04070000	THERMOSTAT COVER ASSY	1
4	PAF4-04070001	COVER THERMOSTAT	1
5	PAF4-04010102	NOZZLE	1
6	PAF4-04000011	GSKET, THERMOSTAT COVER	1
7	PAF4-04070003	ANODE, THERMOSTAT COVER	1
8	PAGB/T818-M5x25	SCREW M5x25	1
9	PAF15-07000031	THERMOSTAT (S60)	1
10	PAF6-04000009	WIRE, LEAD	1
11	PAF6-04000020	PIPE, RETURN WATER	1
12	PAT36-04000023	CLAMP	1
13	PAF6-04000004	COVER, CYLINDER HEAD	1
14	PAF6-04000005	SEAL, RING	1
15	PAF4-04000034	BOLT, CYLINDER HEAD	4
16	PAF6-04050100	CYLINDER HEAD ASSY	1
17	PAF4-04080102	GUIDE, VALVE	2
18	PAF4-04000003	HOLLOW PIN Ø10x8.4x14	2
19	PAF6-04000002	GASKET, CYLINDER HEAD	1

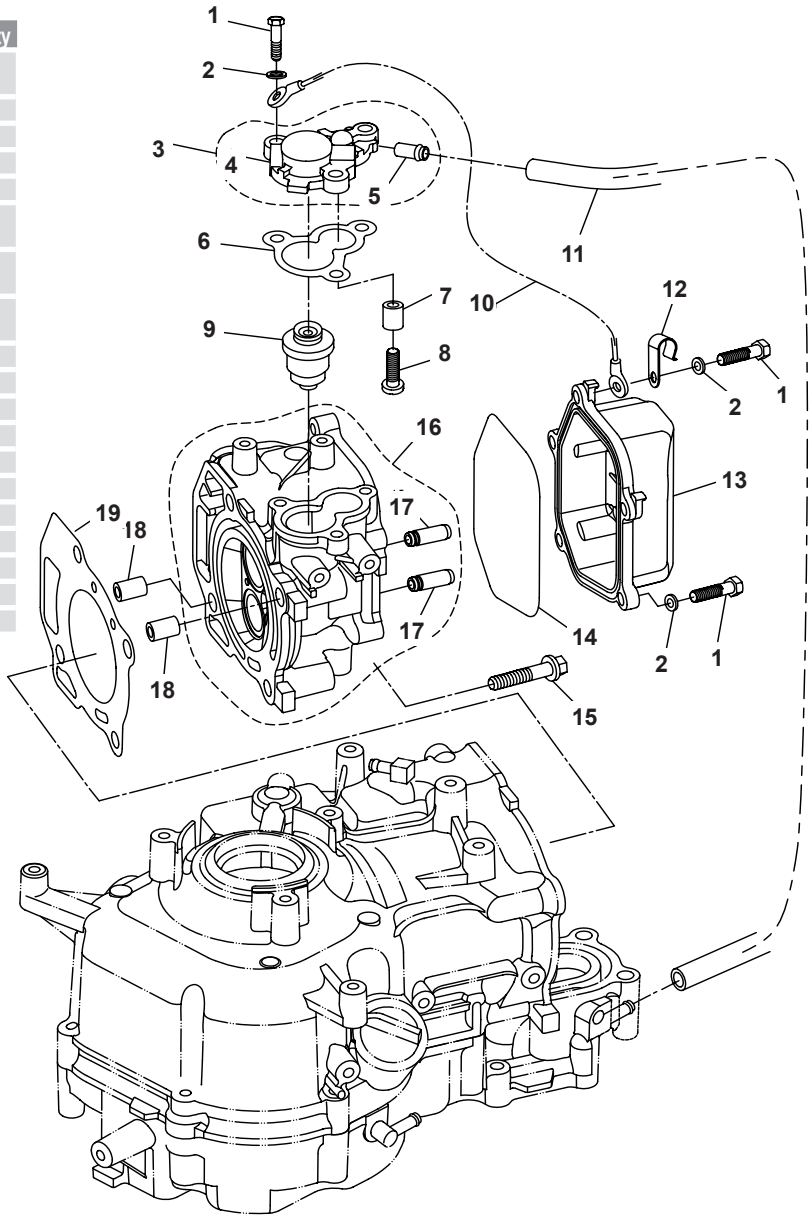

DISTRIBUCIÓN / CAMSHAFT / DISTRIBUZIONE

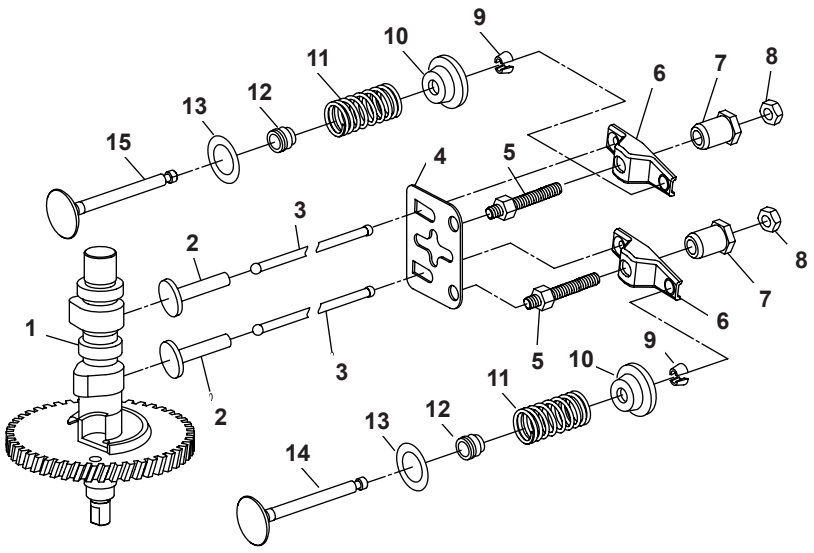

Nº	Ref.	Description	Quanty
1	PAF6-04030000	CAMSHAFT ASSY	1
2	PA166F-000001	LIFTER, VALVE	2
3	PAF6-04000003	ROD, VALVE PUSH	2
4	PAF6-04050004	PLATE, PUSH ROD	1
5	PA166F-010008	BOLT, ROCKER ARM	2
6	PA166F-010009	ARM, VALVE ROCKER	2
7	PA166F-010010	PIVOT, ROCKER ARM	2
8	PA166F-010011	LOCKNUT M6x0.75	2
9	PAF8-05030007	CLAMP, VALVE	4
10	PAF8-05030006	SEAT, VALVE SPRING	2
11	PAF6-04050003	SPRING, VALVE	2
12	PA166F-010003	OIL SEAL, VALVE	2
13	PAF4-04080007	WASHER, VALVE SPRING	2
14	PAF6-04050002	DOOR, EXHAUST	1
15	PAF6-04050001	DOOR, INTAKE	1

BOAT-parts.se

CIGÜEÑAL Y PISTONES / CRANKSHAFT & PISTON
ALBERO MOTORE E PISITONE

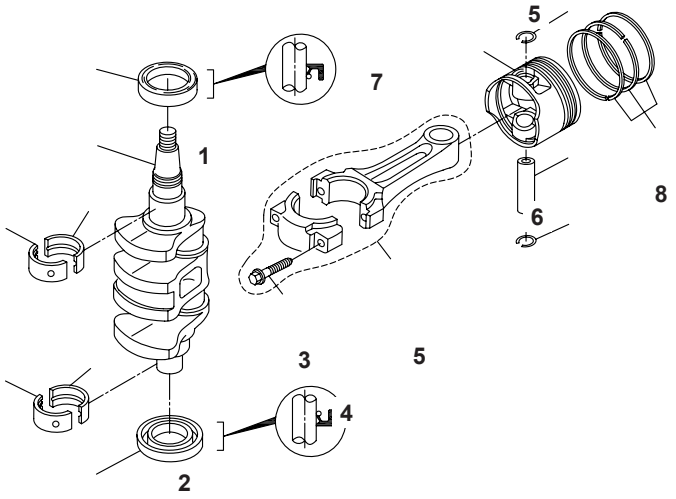

Nº	Ref.	Description	Quanty
1	PAF6-04000100	CRANK ASSY	1
2	PAF4-04000004	WASHER	1
3	PAF4-04020103	BOLT M7x35	2
4	PAF6-04020100	ROD, CONNECTING	1
5	PAF6-04020004	CIRCLIP	2
6	PAF6-04020003	PIN, PISTON	1
7	PAF6-04020001	PISTON	1
8	PAF6-04020002	PISTON RING ASSY	1

BOMBA COMBUSTIBLE / FUEL SYSTEM / POMPA BENZINA

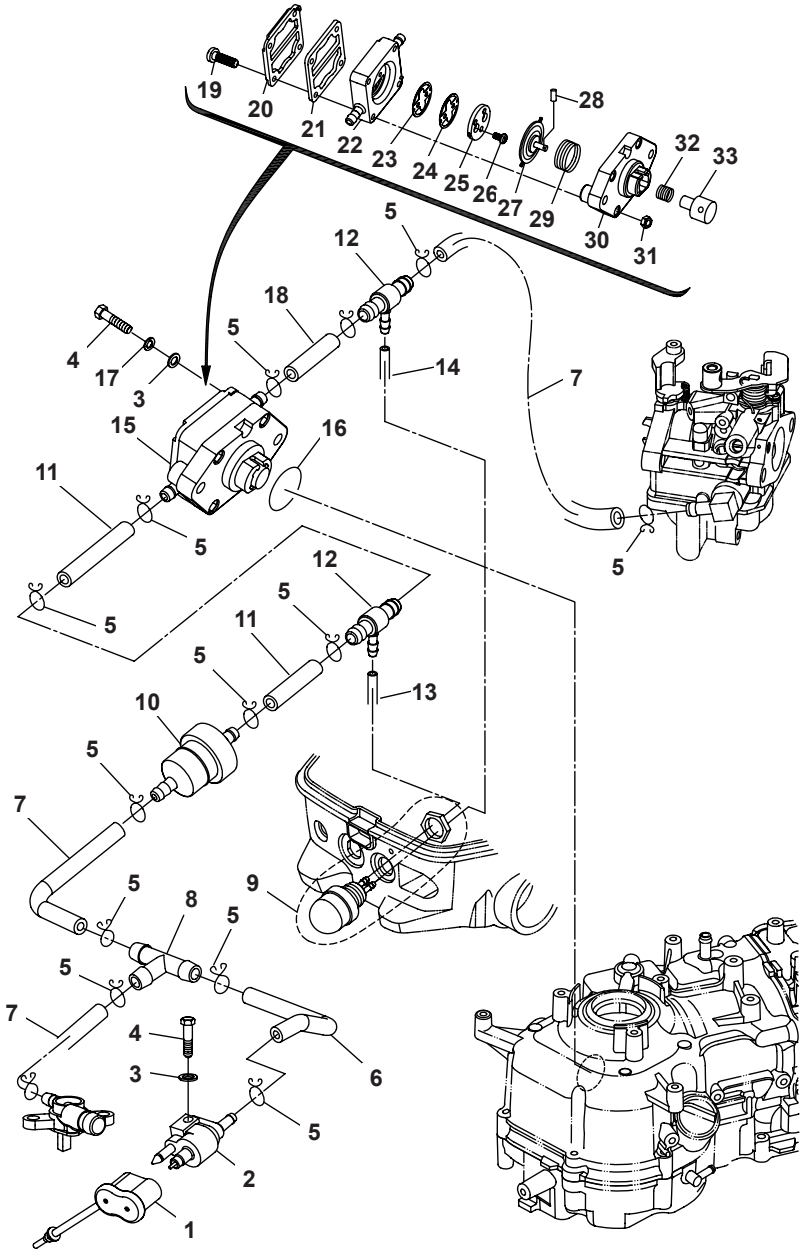

Nº	Ref.	Description	Quanty
1	PAF6-05000006	RUBBER COVER	1
2	PAF4-05000200	FUEL PIPE, TIE-IN ASSY	1
3	PAGB/T97.1-6	WASHER 6	3
4	PAGB/T5783-M6x25	BOLT M6x25	3
5	PAF4-04000030	CLIP "B", FUEL PIPE	14
6	PAF6-05000002	FUEL PIPE "E"	1
7	PAF4-05000007	FUEL PIPE "C"	3
8	PAF15-05000011	PIPE, JOINT 3	1
9	PAF6-05010000	MANUAL PUMP ASSY	1
10	PAF4-05000300	FUEL FILTER ASSY	1
11	PAF6-04000017	FUEL PIPE "C" Ø5xØ10x60	2
12	PAF6-04000600	PIPE JOINT 3	2
13	PAF6-04000018	FUEL PIPE "D" Ø2.5xØ7x240	1
14	PAF6-04000016	FUEL PIPE "B" Ø2.5xØ7x500	1
15	PAF4-04090000	FUEL PUMP ASSY	1
16	PAF4-04090009	O-RING	1
17	PAGB/T93-6	SPRING WASHER 6	2
18	PAT6-03000002	PIPE	1
19	PAGB/T823-M4x25	SCREW, SMALL PAN HEAD M4x25	4
20	PAF4-04090003	COVER, FUEL PUMP	1
21	PAF4-04090004	DIAPHRAGM, TOP	1
22	PAF4-04090100A	FUEL PUMP SHELL	1
23	PAF4-04090001A	VALVE "B"	1
24	PAF4-04090002A	VALVE "A"	1
25	PAF4-04090003A	LIMITING BLOCK, SEPTUM	1
26	PAGB/T819.2-M3x5	SCREW M3x5	2
27	PAF4-04090100	DIAPHRAGM ASSY	1
28	PAGB/T309-3x12	ROLLER NEEDLE Ø3x12	1
29	PAF4-04090008	SPRING, DIAPHRAGM	1
30	PAF4-04090001	SEAT, FUEL PUMP	1
31	PAGB/T6170-M4	NUT M4	4
32	PAF4-04090007	SPRING, PLUNGER	1
33	PAF4-04090006	PLUNGER	1

RECAMBIOS MARINOS S.L.

BOAT-parts.se

ADMISIÓN / INTAKE / ASPIRAZIONE

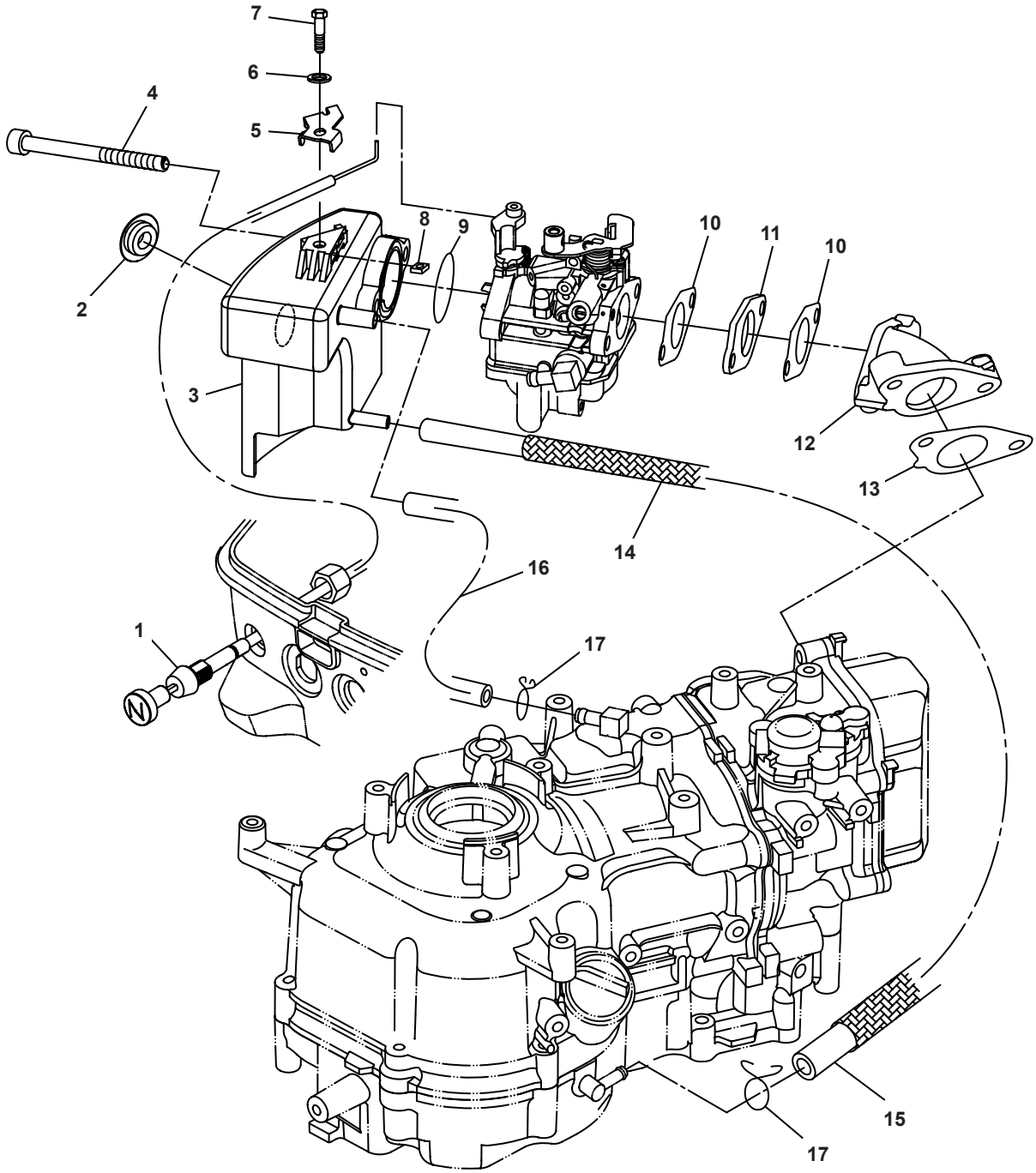

Nº	Ref.	Description	Quanty
1	**PAF6-05000200**	AIR CHOKE ASSY	1
2	**PAF4-04110003**	PLUG, INTAKE SILENCE	1
3	**PAF6-04000200**	INTAKE SILENCE ASSY	1
4	**PAGB/T70.1-M6x85**	BOLT M6x85	2
5	**PAF6-04000014**	PRESSING PLATE	1
6	**PAGB/T97.1-5**	WASHER 5	1
7	**PAGB/T5783-M5x10**	BOLT M5x10	1
8	**PAGB/T39-M5**	SQUARE NUT M5	1
9	**PAGB/T3452-31.5x1.8**	O-RING	1
10	**PAF6-04000012**	GASKET, CARBURETOR	2
11	**PAF6-04000013**	GASKET, CARBURETOR	1
12	**PAF6-04000011**	MANIFOLD, INTAKE	1
13	**PAF6-04000010**	GASKET, INTAKE MANIFOLD	1
14	**PAF6-04000302**	JACKET, RETURN OIL PIPE	1
15	**PAF6-04000301**	PIPE, RETURN OIL	1
16	**PAF6-04000019**	PIPE "B", RETURN OIL	1
17	**PAF4-04000030**	CLIP "B", FUEL PIPE	2

BOAT-parts.se

DIRECCIÓN / STEERING / STERZO

Nº	Ref.	Description	Quanty
1	**PAF4-01090300**	STEERING HANDLE ASSY	**1**
2	**PAF4-01090302**	RUBBER, STEERING HANDLE	**1**
3	**PAF4-01090301**	GRIP, STEERING HANDLE	**1**
4	**PAF4-01090303**	INDICATOR THROTTLE	**1**
5	**PAGB/T827-2x5**	RINET Ø2x5	**1**
6	**PAGB/T820-M5x25**	SCREW M5x25	**1**
7	**PAGB/T91-1.6x12**	COTTER PIN 1.6x12	**1**
8	**PAF4-01090003**	FRICTION, STEERING HANDLE	**1**
9	**PAF6-01020100**	LEVER, THROTTLE	**1**
10	**PAF15-01020002**	FIXED PLATE	**1**
11	**PAGB/T818-M5x12**	SCREW M5x12	**2**
12	**PAGB/T848-10**	SMALL WASHER 10	**2**
13	**PAF4-01090007**	SPRING	**1**
14	**PAF4-01090006**	BUSHING	**1**
15	**PAF6-01020001**	STEERING HANDLE	**1**
16	**PAGB/T899-M6x14**	STUD BOLT M6x14	**2**
17	**PAF4-01090200**	BOLT, FRICTION ADJUSTING	**1**
18	**PAF6-01000002**	COVER	**1**
19	**PAF6-01000001**	BUSHING, STEERING HANDLE	**2**
20	**PAF6-01000003**	STEERING HANDLE COVER ASSY	**1**
21	**PAGB/T889.1-M6**	LCOKING NUT M6	**2**
22	**PAF25-05000016**	CLAMP	**1**
23	**PAF6-01020200**	THROTTLE CABLE ASSY	**2**
24	**PAF6-04000022**	FIXATION PLATE, ACCELEROGRAPH	**1**
25	**PAF6-04000024**	PULLEY, PASSIVITY	**1**

Nº	Ref.	Description	Quanty
26	**PAF6-04000023**	PULLEY, DRIVE	**1**
27	**PAF6-04000025**	BUSHING	**1**
28	**PAGB/T96-6**	BIG WASHER 6	**1**
29	**PAGB/T5783-M6x35**	BOLT M6x35	**1**
30	**PAGB/T97.1-6**	WASHER 6	**1**
31	**PAGB/T5783-M6x10**	BOLT M6x10	**1**
32	**PAF15-07000016**	JOINT, ACCELEROGRAPH CONTROL	**1**
33	**PAF6-04000027**	LINK ROD, ACCELEROGRAPH CONTROL	**1**
34	**PAF6-04000028**	RUBBER CAP	**1**

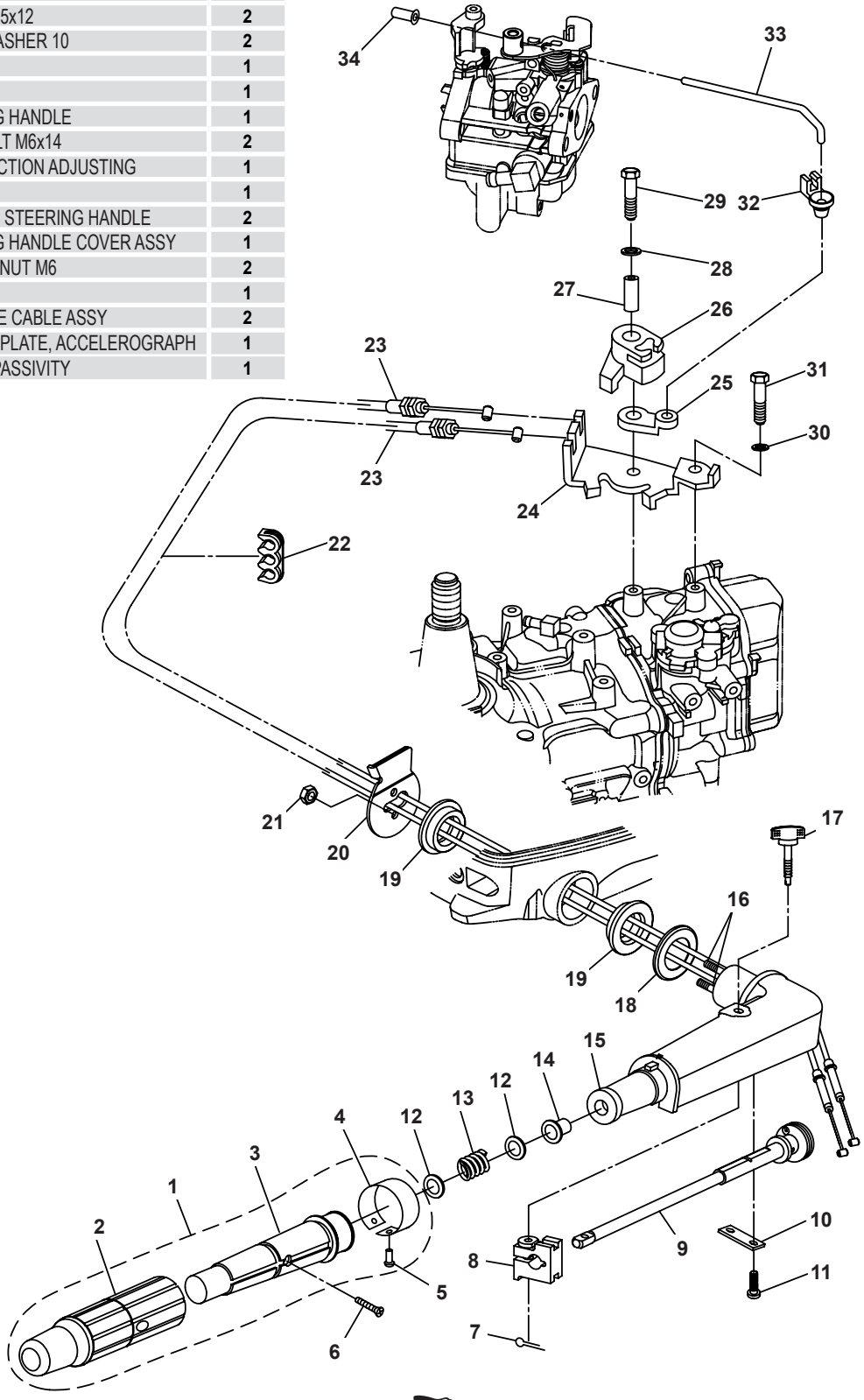

BOAT-parts.se

RECAMBIOS MARINOS S.L.

CARBURADOR / CARBURETOR ASSY / CARBURATORE

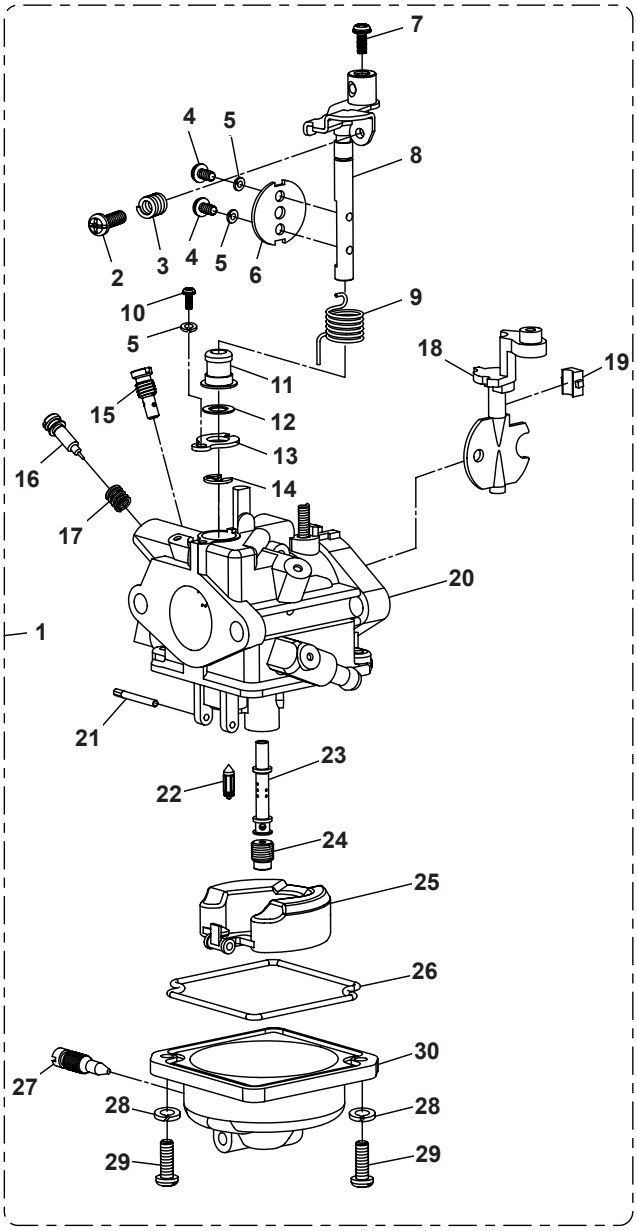

Nº	Ref.	Description	Quanty
1	PAF6-04060000	CARBURETOR ASSY	1
2	PAF6-04060006	SCREW, AIR ADJUSTING	1
3	PAF6-04060007	SPRING	1
4	PAGB/T818-M3x6	SCREW M3x6	2
5	PAGB/T93-3	SPRING WASHER 3	3
6	PAF6-04060008	APRON, ACCELERATOR	1
7	PAGB/T818-M4x8	SCREW M4x8	1
8	PAF6-04060100	ACCELERATOR BAR ASSY	1
9	PAF6-04060002	SPRING, SWING LINK	1
10	PAGB/T818-M3x8	SCREW M3x8	1
11	PAF6-04060003	BUSHING	1
12	PAF6-04060004	WASHER, NYLON	1
13	PAF6-04060005	PRESSING PLATE	1
14	PAGB/T896-4	CIRCLIP 4	1
15	PAF6-04060013	JET, AIR ADJUSTING	1
16	PAF6-04060011	SCREW, MIXTURE	1
17	PAF6-04060012	SPRING	1
18	PAF6-04060009	APRON, AIR CHOKE	1
19	PAF6-04060010	BLOCK, AIR CHOKE	1
20	PAF6-04060001	BODY, CARBURETOR	1
21	PAF6-04060016	PIN, FLOAT	1
22	PAF6-04060014	NEEDLE VALVE	1
23	PAF6-04060017	MAIN NOZZLE	1
24	PAF6-04060018	MAIN JET	1
25	PAF6-04060015	FLOAT	1
26	PAF6-04060020	SEAL RING	1
27	PAF6-04060021	SCREW, DRAIN	1
28	PAGB/T93-4	SPRING WASHER 4	2
29	PAGB/T818-M4x12	SCREW M4x12	2
30	PAF6-04060019	BODY, OIL CUP	1

ELECTRICIDAD / ELECTRICAL / PARTE ELETTRICA

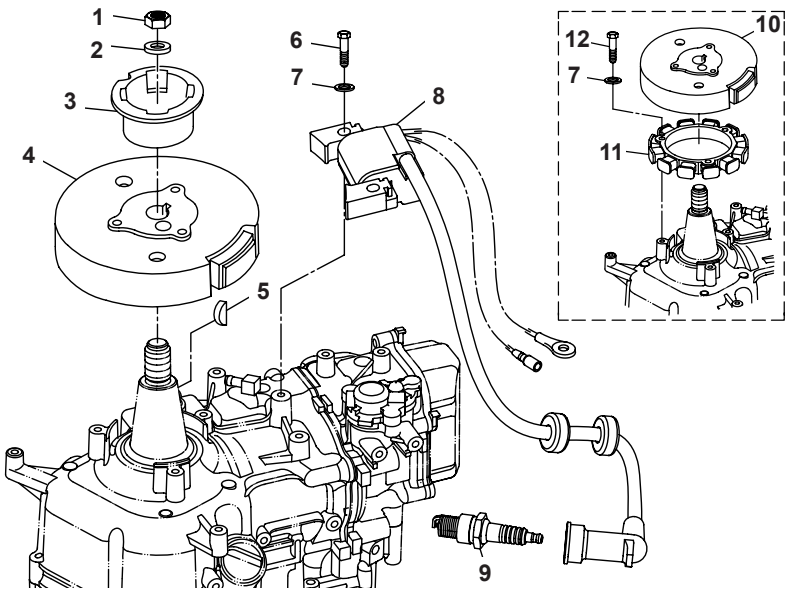

Nº	Ref.	Description	Quanty
1	PAF8-05000024	NUT, FLYWHEEL	1
2	PAT15-05000011	WASHER, FLYWHEEL	1
3	PAF6-04000029	PULLEY, STANTER	1
4	PAF6-04000500	FLYWHEEL ASSY	1
5	PAF4-04000019	KEY	1
6	PAGB/T5783-M6x25	BOLT M6x25	2
7	PAGB/T97.1-6	WASHER 6	5
8	PAF6-04000400	IGNITION COIL ASSY	1
9	PANGK CR6HSA	SPARK PLUG	1
10	PAF6-04000700A	FLYWHEEL ASSY	1
11	PAF6-04000800A	STARTOR ASSY	1
12	PAGB/T5783-M6x30	BOLT M6x30	3

BOAT-parts.se

COLA SUPERIOR / UPPER CASING / PARTE ALTA PIEDE

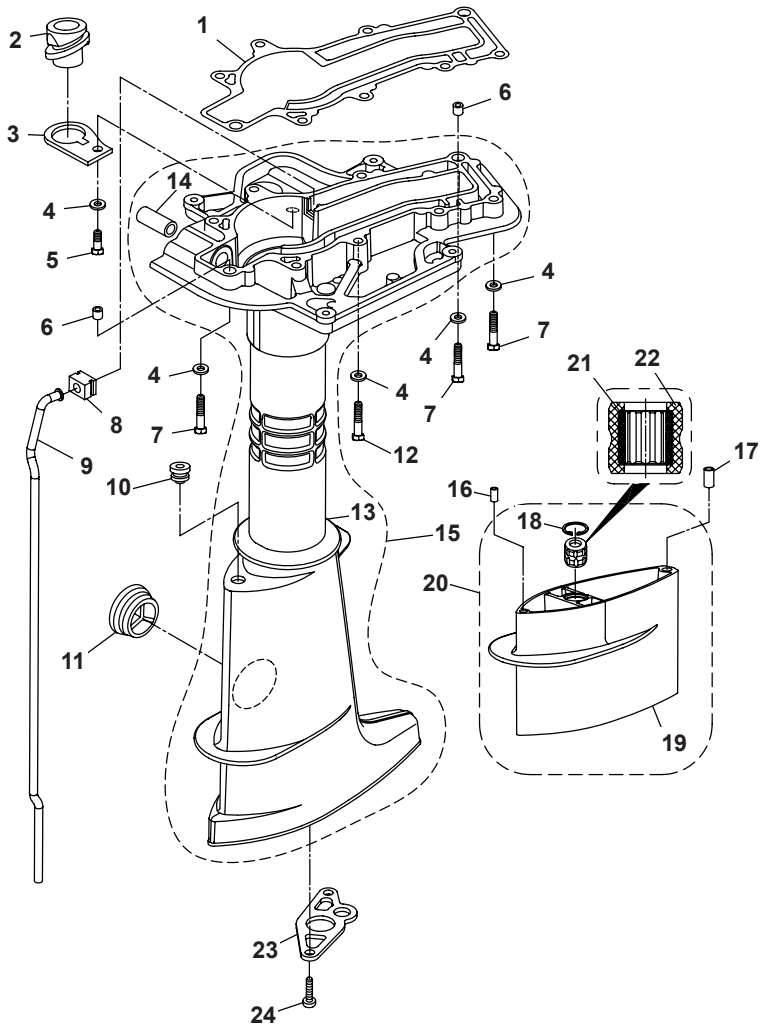

Nº	Ref.	Description	Quanty
1	PAF6-00000001	GASKET ENGINE	1
2	PAF6-02000003	RUBBER SLEEVE, OIL OUTLET	1
3	PAF6-02000004	PRESSING PLATE	1
4	PAGB/T97.1-6	WASHER 6	10
5	PAGB/T5783-M6x14	BOLT M6x14	1
6	PAF4-00000001	HOLLOW PIN Ø9x6.5x10	2
7	PAGB/T5782-M6x40	M6x40	5
8	PAF4-02040002	RUBBER SEAL	1
9	PAF6-02000001L	WATER PIPE (L)	1
	PAF6-02000001S	WATER PIPE (S)	1
10	PAF4-02000011	SEAL, SHIFT ROD	1
11	PAF4-02000012	RUBBER PLUG, UPPER CASING	1
12	PAGB/T5782-M6x50	BOLT M6x50	4
13	PAG6-02000101	UPPER CASING	1
14	PAF4-02000002	COPPER BUSH, UPPER CASING	1
15	PAF6-02000100	UPPER CASING ASSY	1
16	PAT5-00000001	HOLLOW PIN Ø7.5	1
17	PAT5-00000002	HOLLOW PIN Ø9.5	1
18	PAGB/T893.1-22	CIRCLIP 22	1
19	PAT5-02010001	EXTENSION	1
20	PAT5-02010000	EXTENSION ASSY	1
21	PAT5-02010002	BUSHING, DRIVE SHAFT	1
22	PAF2.6-03020003L	RUBBER BUSHING	1
23	PAT5-02000008	ORIENTED PLATE, WATER PIPE	1
24	PAGB/T818-M5x10	SCREW M5x10	2

CAMBIO / CONTROL SYSTEM / CALANDRA

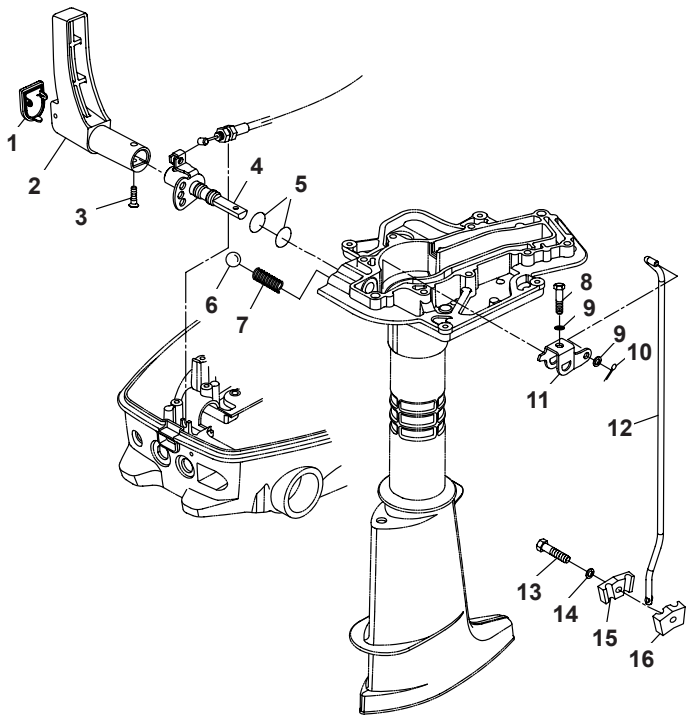

Nº	Ref.	Description	Quanty
1	PAF6-02000005-1	COVER	1
2	PAF6-02000005	HANDLE, GEAR SHIFT	1
3	PAGB/T820-M5x20	SCREW M5x20	1
4	PAF6-02000200	SHAFT, CHANGE	1
5	PAJISB2401-P9	O-RING	2
6	PAGB/T308-8	BALL 8	1
7	PAF4-02000003	SPRING, GEAR	1
8	PAGB/T5783-M5x25	BOLT M5x25	1
9	PAGB/T97.1-5	WASHER 5	2
10	PAGB/T91-1.6x12	PIN COTTER 1.6x12	1
11	PAF4-02000006	LEVER, SHIFT ROD	1
12	PAF6-02000002	ROD, SHIFT	1
13	PAGB/T5783-M6x20	BOLT M6x20	1
14	PAF4-00000005	BIG WASHER	1
15	PAF2.6-0000001	CONNECTOR, SHIFT ROD “A”	1
16	PAF2.6-0000002	CONNECTOR, SHIFT ROD “B”	1

RECAMBIOS MARINOS S.L.

BOAT-parts.se

SOPORTE MOTOR / BRACKET / SUPPORTO MOTORE

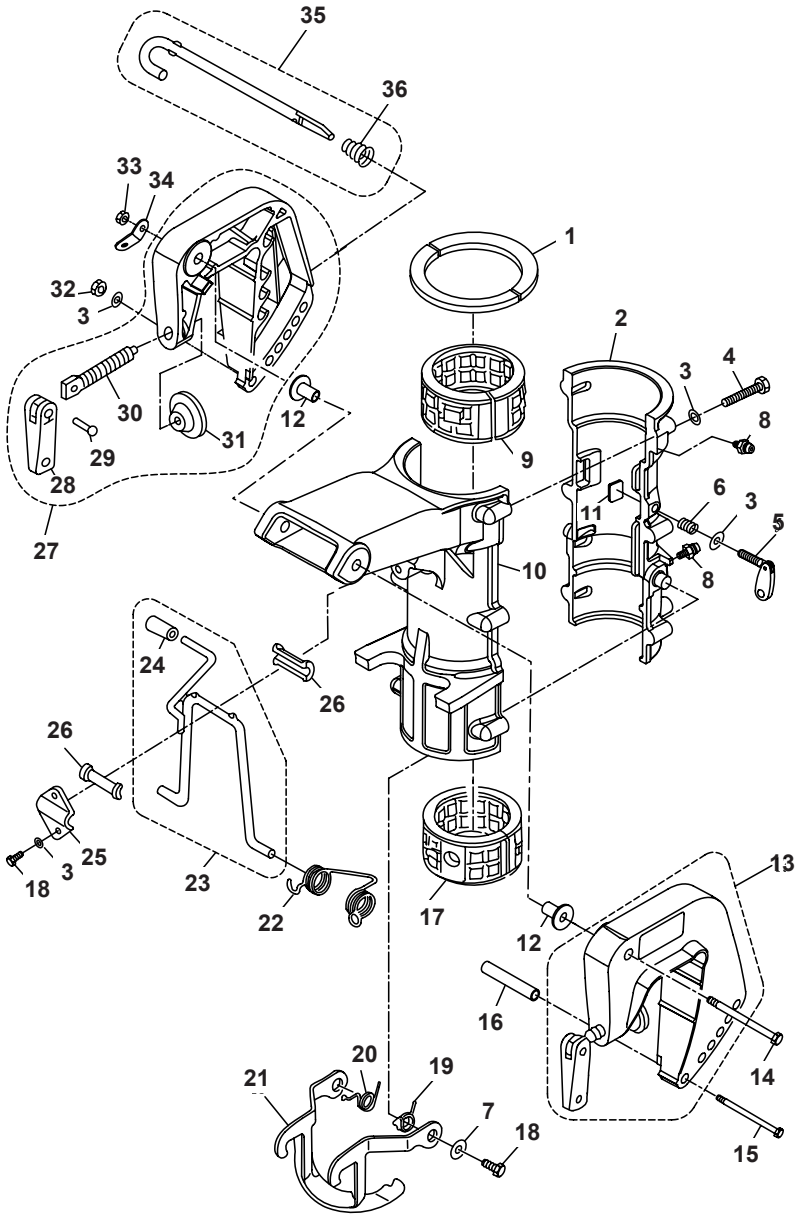

Nº	Ref.	Description	Quanty
1	PAT5-01010003	NYLON GASKET	2
2	PAF6-01010101	COVER, ROTARY BRACKET	1
3	PAGB/T97.1-6	WASHER 6	10
4	PAGB/T5783-M6x35	BOLT M6x35	6
5	PAF2.6-01050100	LOCKED HANDLE ASSY	1
6	PAF2.6-01050002	COMPRESS SPRING	1
7	PAGB/T96-6	BIG WASHER 6	3
8	PAJB/T9740.1-M6	OILER M6	2
9	PAT5-01010004	UPPER ABSORBER	1
10	PAF6-01010001	SEAT, ROTARY BRACKET	1
11	PAT5-01010100	LOCKED BLOCK ASSY	2
12	PAF4-01000003	NYLON WASHER	2
13	PAF4-01010000	CLAMP BRACKET ASSY (RIGHT)	1
14	PAGB/T5782-M8x140	BOLT M8x140	1
15	PAGB/T5782-M6x130	BOLT M6x130	1
16	PAF8-01010001	TUBE BOLT	1
17	PAT5-01010005	LOWER ABSORBER	1
18	PAGB/T5783-M6x12	BOLT M6x12	4
19	PAF4-01000007	WREST SPRING (RIGHT)	1
20	PAF4-01000006	WREST SPRING (LEFT)	1
21	PAT5-01010300	LOCKED HOOK ASSY, TILT	1
22	PAT5-01010002	WREST SPRING, BRACKET	1
23	PAT5-01010400	SUPPORT ASSY	1
24	PAF4-01030103	HANDLE SHEATH	1
25	PAF8-01010105	PRESS PLATE	1
26	PAF8-01010103	BUSHING, BRACKET	2
27	PAF4-01020000	CLAMP BRACKET ASSY (LEFT)	1
28	PAF4-01010004	CLAMP HANDLE, STERN	2
29	PAF4-01010005	RIVET, CLAMP HANDLE	2
30	PAF4-01010002	CLAMP SCREW	2
31	PAF4-01010003	CLAMP PAD	2
32	PAGB/T6170-M6	NUT M6	1
33	PAGB/T889.1-M8	LOCKING NUT M8	1
34	PAF4-01000002	PLATE, TWO HOLE	1
35	PAF8-01010200	THRUST ROD ASSY	1
36	PAF4-01050002	CONICAL SPRING	1

COLA INFERIOR / LOWER CASING / PARTE INFERIORE PIEDE

Nº	Ref.	Description	Quanty
1	PAF6-03000000L	LOWER CASING ASSY (L)	1
	PAF6-03000000S	LOWER CASING ASSY (S)	1
2	PAF6-03000100 (L)	DRIVE SHAFT ASSY (L)	1
	PAF6-03000100 (S)	DRIVE SHAFT ASSY (S)	1
3	PAT5-03000009	DOWEL PIN, IMPELLER	1
4	PAT5-03000003	PINION	1
5	PAT5-03000013	SEAL A, WATER PIPE	2
6	PAT5-03000012	WATER PIPE B	1
7	PAT5-03000014	SEAL B, WATER PIPE	1
8	PAGB/T5782-M6x45	BOLT M6x45	4
9	PAGB/T97.1-6	WASHER 6	9
10	PAF6-03000001	WATER PUMP	1
11	PAF6-03000002	INNER SHELL, WATER PUMP	1
12	PAT5-03000300	IMPELLER, WATER PUMP	1
13	PAF6-03000003	UPPER GASKET, OUTER PLATE	1
14	PAT5-03000007	OUTER PLATE	1
15	PAT5-03000006	LOWER GASKET, OUTER PLATE	1

Nº	Ref.	Description	Quanty
16	PAF25-04000007	PIN Ø4x10	2
17	PAT5-03000201	WATER PUMP SEAT	1
18	PAT5-03000100 (L)	CAM ASSY, SHIFT ROD (L)	1
	PAT5-03000100 (S)	CAM ASSY, SHIFT ROD (S)	1
19	PAGB/T879.2-1.5x12	PIN 1.5x12	1
20	PAJISB2401 P16	O-RING 15.8x2.4	1
21	PAT5-03000020	ORIENTED BUSHING, SHIFT ROD	1
22	PAT5-03000022	SEAL B, ORIENTED BUSHING	1
23	PAT5-03000023	PLATE, ORIENTED BUSHING	1
24	PAGB/T5783-M6x16	BOLT M6x16	2
25	PAT5-03000202	OIL SEAL, WTAER PUMP SEAT	1
26	PAT5-03000004-1	SHIM 0.10mm	
	PAT5-03000004-2	SHIM 0.15mm	
27	PAT5-03000005	GASKET, WATER PUMP SEAT	1
28	PATLA1412Z	NEEDLE BEARING	1
29	PAT5-03000700	LOWER CASING ASSY	1
30	PAT5-00000001	HOLLOW PIN Ø7.5x10	1

BOAT-parts.se

Nº	Ref.	Description	Quanty
31	**PAGB/T861.1-6**	LOCK WASHER 6	1
32	**PAT5-03000017**	ANODE	1
33	**PAT5-00000002**	HOLLOW PIN Ø9.5x10	1
34	**PAGB/T97.1-8**	WASHER 8	1
35	**PAGB/T5782-M8x40**	BOLT M8x40	1
	PAGB/T5782-M8x167	BOLT M8x167	1
36	**PAF4-03000023**	PLUG, OIL HOSE	2
37	**PAF4-03000024**	GASKET	2
38	**PAGB/T5782-M6x45**	BOLT M6x45	1
	PAGB/T5782-M6x172	BOLT M6x172	1
39	**PAGB/T820-M6x20**	SCREW M6x20	1
40	**PAT5-03000016**	WATER INLET	1
41	**PAGB/T276-6004**	BEARING 6004	1
42	**PAF8-04000002-1**	SHIM 0.10mm	
	PAF8-04000002-2	SHIM 0.15mm	
43	**PAT5-03010000**	FORWARD GEAR ASSY	1
44	**PAT5-03000404**	PIN, CLUTCH	1
45	**PAT5-03000400**	SHAFT ASSY, PROPELLER	1
46	**PAGB/T879.1-3.5x28**	PIN 3.5x28	1
47	**PAT5-03000403**	CLUTCH, DOG	1
48	**PAT5-03000402**	SPRING, CLUTCH	1
49	**PAT5-03000401**	SHAFT, PROPELLER	1
50	**PAT5-03000015**	WASHER, REVERSE GEAR	1
51	**PAT5-03000600**	REVERSE GEAR ASSY	1
52	**PAT5-03000500**	COVER,ASSY, LOWER CASING	1
53	**PAGB/T276-6002**	BEARING 6002	1
54	**PAJASOF404 31-050**	O-RING	1
55	**PAF8-04040004**	OIL SEAL	1
56	**PAT5-03000501**	COVER, LOWER CASING	1
57	**PAGB/T5783-M6x20**	BOLT M6x20	2
58	**PAT5-03000800**	CUSHION ASSY, PROPELLER SHAFT	1
59	**PAF6-03010000**	PROPELLER ASSY	1
60	**PAGB/T96-10**	WASHER 10	1
61	**PAF15-06000016**	NOTCH NUT	1
62	**PAGB/T91-3.2x18**	PIN, COTTER Ø3.2x18	1

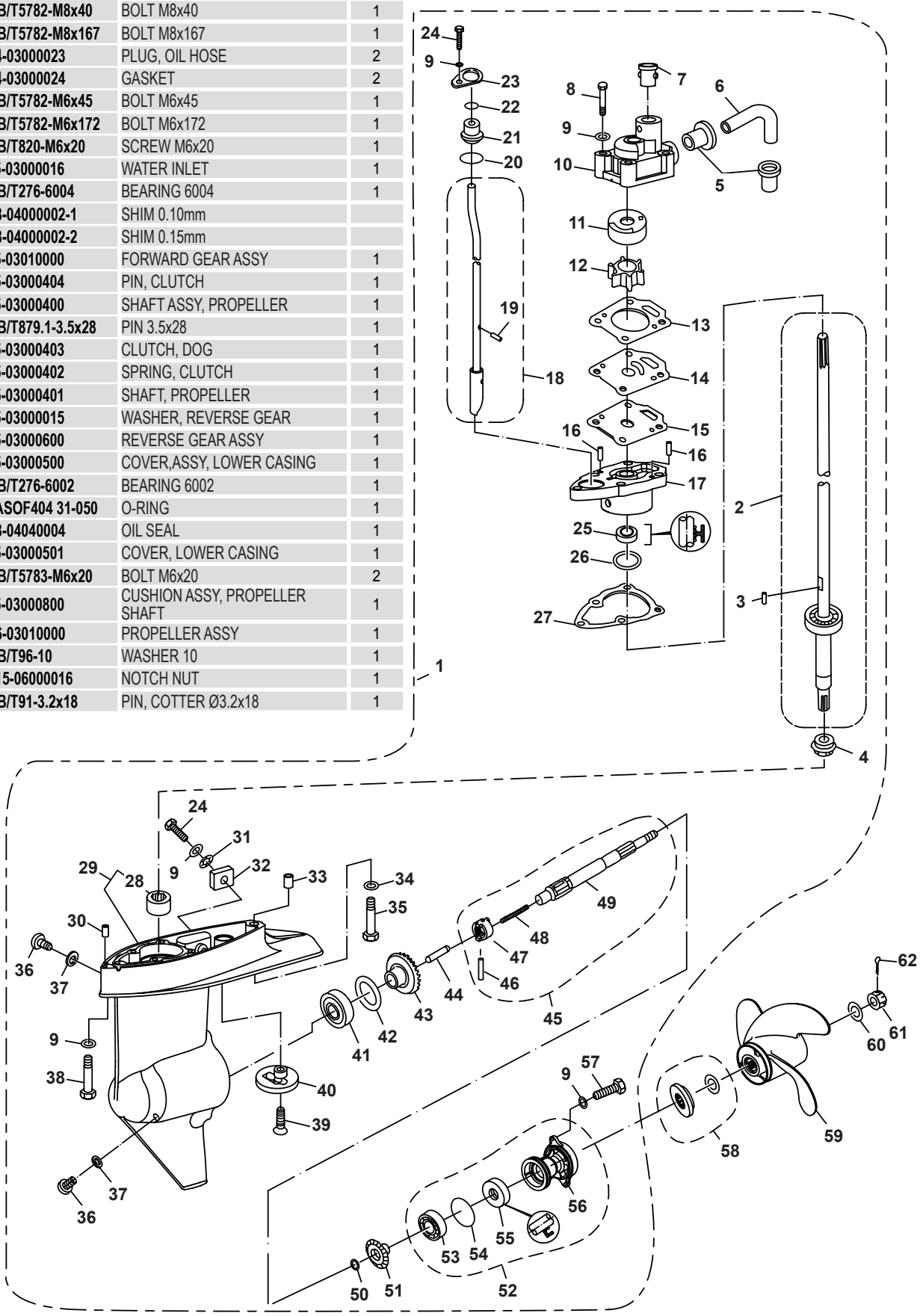

RECAMBIOS MARINOS S.L.

BOAT-parts.se



F20A / F15A

TAPA MOTOR / TOP COWLING ASSY / CALANDRA

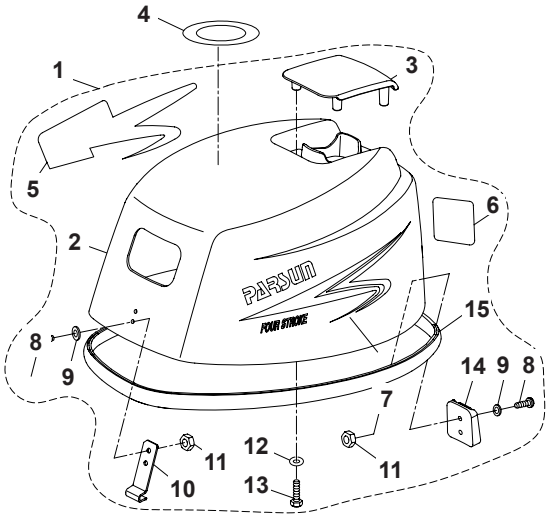

Nº	Ref.	Description	Quanty
1	PAF20-06000000	TOP COWLING ASSY	1
2	PAF20-06000001	TOP COWLING	1
3	PAF20-06000003	COVER, TOP COWLING	1
4	PAF4-08000019	MARK 19	1
5	PAF15-12000002	MARK, RIGHT	1
6	PAF25-08000006	MARK, FRONT (F20)	1
	PAF15-12000003	MARK, FRONT (F15)	1
7	PAF15-12000001	MARK, LEFT	1
8	PAGB/T818-M5x16	SCREW M5x16	4
9	PAGB/T97.1-5	WASHER 5	4
10	PAF20-06000004	HOOK, FRONT	1
11	PAGB/T6170-M5	NUT M5	4
12	PAGB/T97.1-6	WASHER 6	4
13	PAGB/T5783-M6x20	BOLT M6x20	4
14	PAF20-06000005	LOCKING HOOK	1
15	PAF20-06000002	SEAL, RUBBER	1

ARRANQUE / STARTER ASSY / AVVIAMENTO

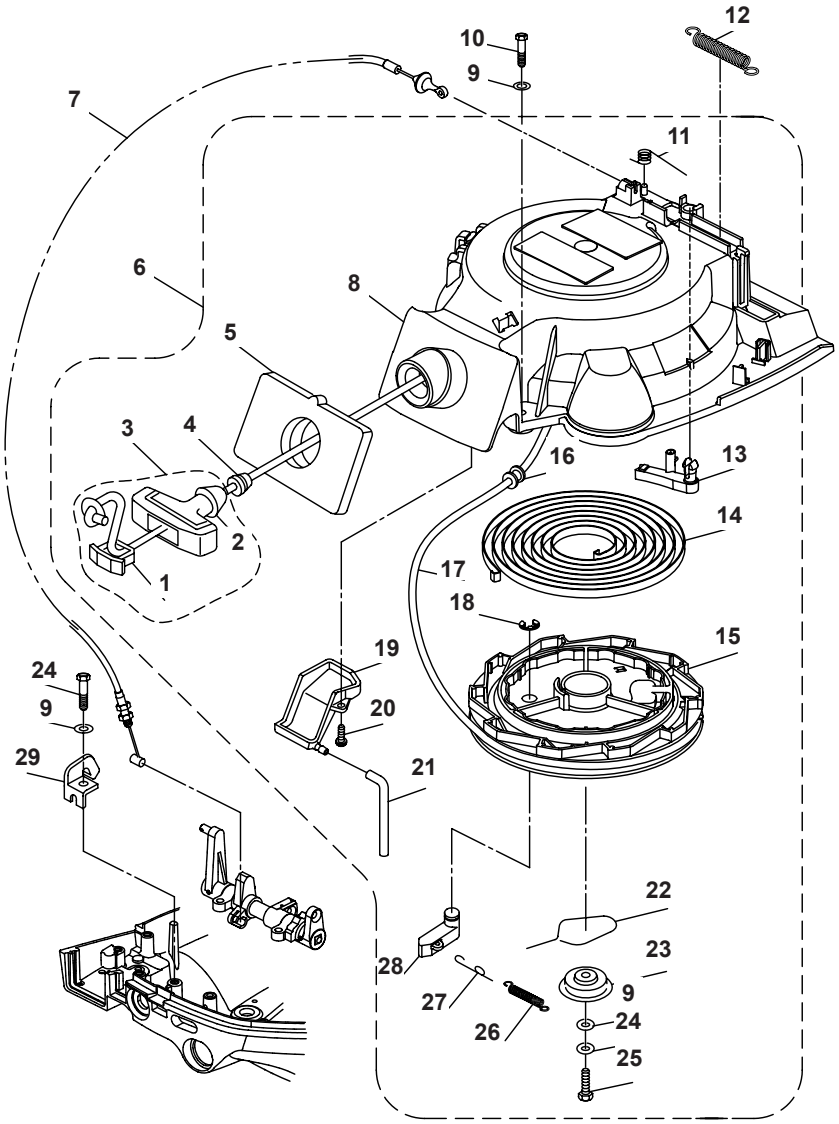

Nº	Ref.	Description	Quanty
1	PAF4-04130102	COVER, STARTER HANDLE	1
2	PAF25-05160501	STARTER HANDLE	1
3	PAF25-05160500	STARTER HANDLE ASSY	1
4	PAF25-05160021	DAMPER, STARTER HANDLE	1
5	PAF20-05070003	SEAL	2
6	PAF20-05070000	STARTER ASSY	1
7	PAF20-05070200	TIGHTWIRE, DETENT	1
8	PAF20-05070101	CASING, STARTER	1
9	PAGB/T97.1-6	WASHER 6	5
10	PAGB/T5783-M6x25	BOLT M6x25	3
11	PAF15-07130106	SPRING, DETENT	1
12	PAF15-05000029	SPRING, DETENT TIGHTWIRE	1
13	PAF15-07130105	DETENT	1
14	PAF15-07130107	SPRING, VOLUTE	1
15	PAF15-07130201	WHELL, START-UP	1
16	PAF4-04130013	MEATUS, START ROPE	1
17	PAF15-07130205	ROPE, STARTER Ø5.5x1.8 m	1
18	PABG/T896-8	CIRCLIP 8	1
19	PAF20-05070001	COVER	1
20	PAGB/T845-ST4.2x16	SCREW ST4.2x16	2
21	PAF20-05070002	PIPE Ø5xØ10x200	1
22	PAF15-07130002	CLIP, PLATE	1
23	PAF20-05070004	PLATE, DRIVE	1
24	PAGB/T93-6	SPRING, WASHER 6	1
25	PAGB/T5783-M6x16	BOLT M6x16	2
26	PAF15-07130203	SPRING	1
27	PAF15-07130204	LINK ROD	1
28	PAF15-07130202	PAWL, DRIVE	1
29	PAF20-05000030	FIXATION PLATE	1

BOAT-parts.se

BANDEJA / BOTTOM COWLING / BASE CALANDRA

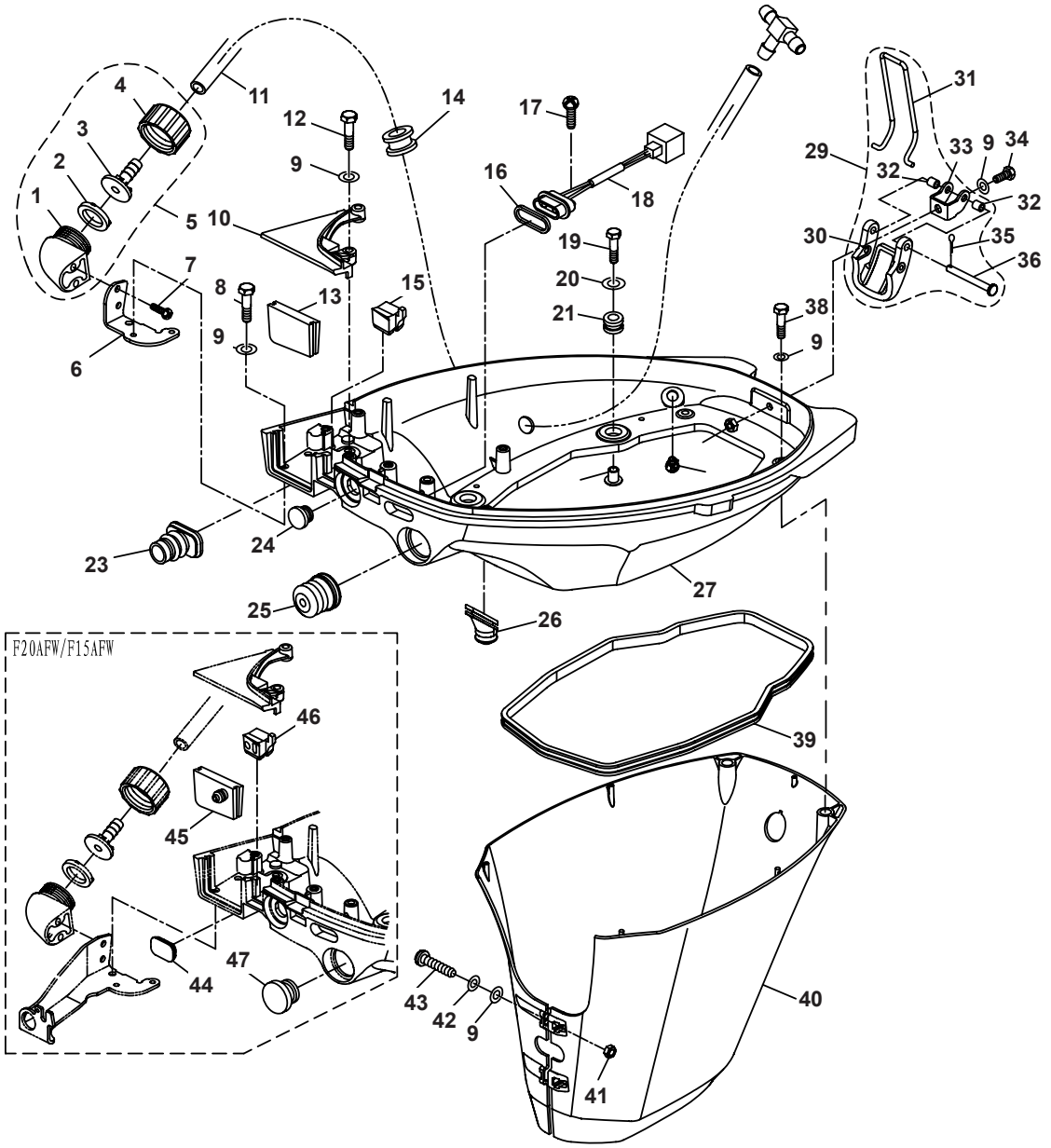

Nº	Ref.	Description	Quanty
1	**PAF25-03000101W**	BODY JAM	1
2	**PAF25-03000102W**	SEAL, RUBBER	1
3	**PAF25-03000103W**	LINK, JAM	1
4	**PAF25-03000104W**	NUT, JAM	1
5	**PAF25-03000100W**	JAM, ASSY	1
6	**PAF20-03000010**	SUPPORT PLATE, JAM	1
7	**PAGB/T84.5-ST5.5x19**	SCREW ST5.5x19	2
8	**PAGB/T5783-M6x8**	BOLT M6x8	2
9	**PAGB/T97.1-6**	WASHER 6	9
10	**PAF20-03000007**	COVER, COWLING	1
11	**PAF20-03000011**	PIPE Ø6xØ11x680	1
12	**PAGB/T5783-M6x30**	BOLT M6x30	2
13	**PAF20-03000005**	SEAL, SQUARE	1
14	**PAF20-03000004**	SEAL, RUBBER	1
15	**PAF20-03000006**	RUBBER PLUG	1
16	**PAF20-03000101**	SEAL	1
17	**PAGB/T818-M6x16**	SCREW M6x16	1
18	**PAF20-03000100**	PILOT LIGHT ASSY	1
19	**PAGB/T5783-M6x30**	BOLT M6x30	4
20	**PAF25-00000004**	WASHER	4
21	**PAF25-03000006**	DAMPER	4
22	**PAF25-03000007**	BUSH, DAMPER	4
23	**PAF20-03000003**	JACKET	1
24	**PAF2.6-05000004**	SEAL	1
25	**PAF15-05000016**	JACKET, RUBBER	1

Nº	Ref.	Description	Quanty
26	**PAF20-03000008**	JACKET, GEAR SHIFT LINK ROD	1
27	**PAF20-03000001**	BOTTOM COWLING	1
28	**PAF15-05000009**	WATER NIPPLE, PLASTIC	1
29	**PAF20-03020000**	LOCKING HOOK ASSY, TOP COWLING	1
30	**PAF20-03020002**	BODY, LOCKING HOOK	1
31	**PAF20-03020004**	STEEL WIRE, LOCKING HOOK	1
32	**PAF20-03020005**	BUSH, LOCKING HOOK	2
33	**PAF20-03020001**	SEAT, LOCKING HOOK	1
34	**PAGB/T5783-M6x12**	BOLT M6x16	1
35	**PAGB/T91-Ø1.6x12**	COTTER PIN Ø1.6x12	1
36	**PAF20-03020003**	SHAFT, LOCKING HOOK	1
37	**PAGB/T889.1-M6**	LOCKING NUT M6	1
38	**PAGB/T5783-M6x20**	BOLT M6x20	2
39	**PAF20-03000002**	SEAL	1
40	**PAF20-00000011**	COVER, UPPER CASING	1
41	**PAGB/T6170-M6**	NUT M6	2
42	**PAGB/T93-6**	SPRING WASHER 6	2
43	**PAGB/T818-M6x30**	SCREW M6x30	2
44	**PAF20-03000007W**	RUBBER PLUG, SQUARE	1
45	**PAF20-03000005W**	RUBBER SEAL, SQUARE	1
46	**PAF20-03000006W**	RUBBER PLUG	1
47	**PAF25-03000024W**	JAM “B”	1

RECAMBIOS MARINOS S.L.
BOAT-parts.se

CAMBIO / CONTROL SYSTEM / CALANDRA

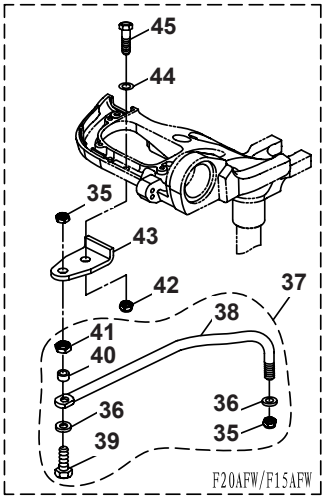

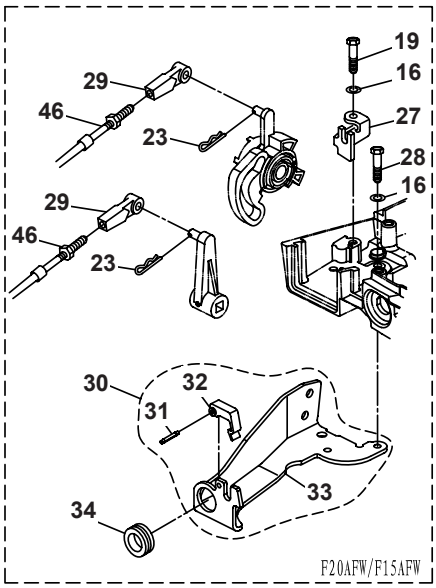

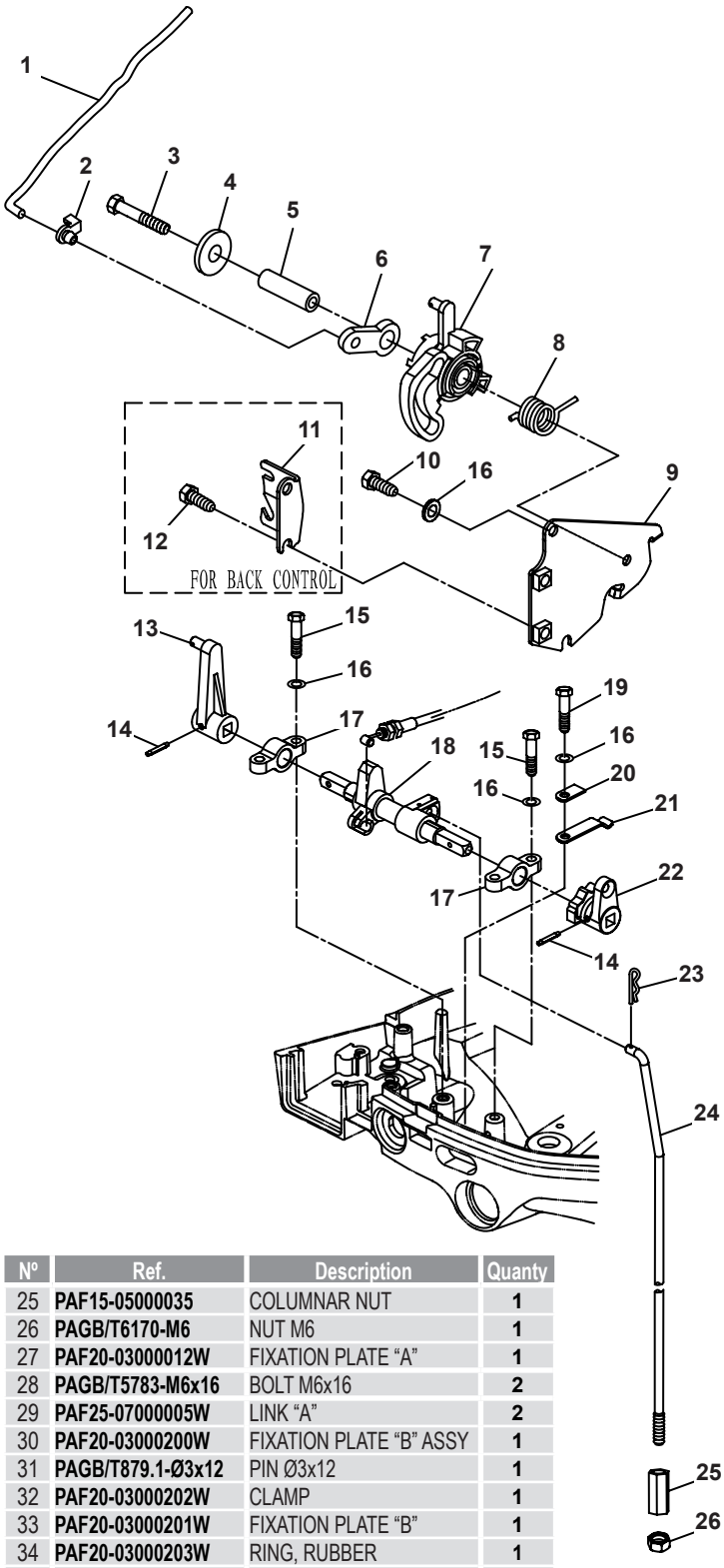

Nº	Ref.	Description	Quanty
1	PAF25-05000008	LINK ROD	1
2	PAF15-07000016	LINK	1
3	PAGB/T5782-M6x55	BOLT M6x55	1
4	PAGB/T96-6	BIG WASHER 6	1
5	PAF15-07000012	BUSH	1
6	PAF15-07000014	PULLEY, PASSIVITY	1
7	PAF20-05060001	PULLEY, DRIVE	1
8	PAF20-05060002	SPRING	1
9	PAF20-05060101	FIXATION PLATE, ACCELEROGRAPH	1
10	PAGB/T5783-M6x14	BOLT M6x14	2
11	PAF20-05060102	FIXATION PLATE, THROTTLE CABLE	1
12	PAGB/T5783-M6x10	BOLT M6x10	2
13	PAF20-03010001	ROCKER ARM, GEAR SHIFT	1
14	PAGB/T879.1-Ø3x20	PIN Ø3x20	2
15	PAGB/T5783-M6x25	BOLT M6x25	4
16	PAGB/T97.1-6	WASHER 6	10
17	PAF15-05040002	SEAT, GEAR SHIFT ROD	2
18	PAF20-03010100	GEAR SHIFT ASSY	1
19	PAGB/T5783-M6x20	BOLT M6x20	1
20	PAF15-05000031	PLATE, SPRING	1
21	PAF15-05000032	PRESSING PLATE	1
22	PAF20-03010200	ARM, SHIFT ROD	1
23	PAF15-00000012	CLIP Ø1.8	3
24	PAF20-03000009L	SHIFT ROD (L)	1
	PAF20-03000009S	SHIFT ROD (S)	

Nº	Ref.	Description	Quanty
25	PAF15-05000035	COLUMNAR NUT	1
26	PAGB/T6170-M6	NUT M6	1
27	PAF20-03000012W	FIXATION PLATE "A"	1
28	PAGB/T5783-M6x16	BOLT M6x16	2
29	PAF25-07000005W	LINK "A"	2
30	PAF20-03000200W	FIXATION PLATE "B" ASSY	1
31	PAGB/T879.1-Ø3x12	PIN Ø3x12	1
32	PAF20-03000202W	CLAMP	1
33	PAF20-03000201W	FIXATION PLATE "B"	1
34	PAF20-03000203W	RING, RUBBER	1
35	PAF25-07000006W	LOCKING NUT 3/8"	2
36	PAGB/T97.1-10	WASHER 10	2
37	PAF20-07000100W	STEERING ROD ASSY	1
38	PAF20-07000101W	STEERING ROD	1
39	PAF15-11020002W	BOLT	1
40	PAF25-07000303W	BUSH	1
41	PAF25-07000304W	NUT 3/8"	1
42	PAGB/T889.1-M8	NUT M8	1
43	PAF20-07000102W	LINK PLATE	1
44	PAGB/T97.1-8	WASHER 8	1
45	PAGB/T5783-M8x25	BOLT M8x25	1
46	PAF25-07000200W	CONTROL CABLE ASSY	2

BOAT-parts.se

BLOQUE / CRANKCASE / BLOCCO

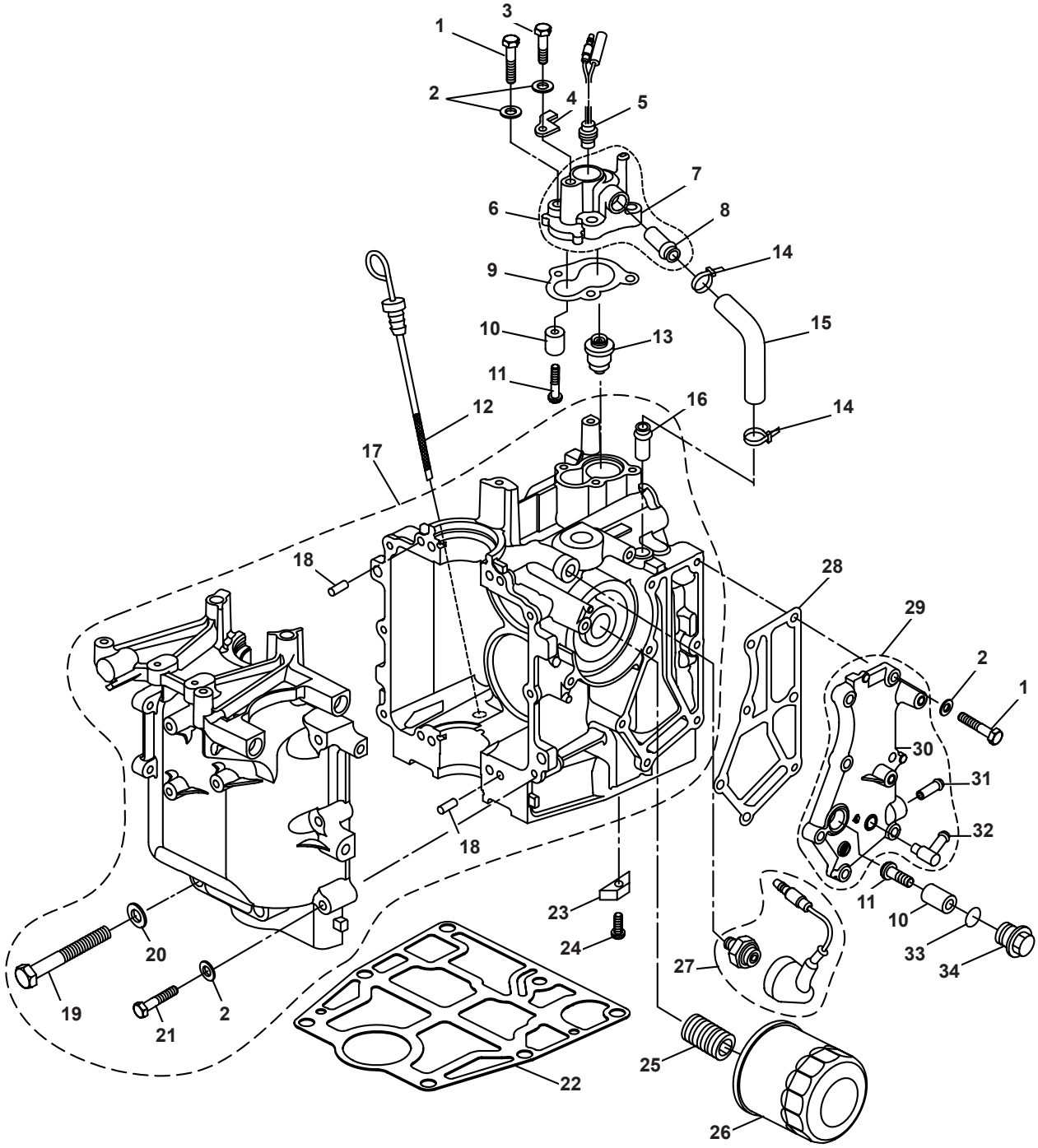

Nº	Ref.	Description	Quanty
1	**PAGB/T5783-M6x25**	BOLT M6x25	10
2	**PAGB/T97.1-6**	WASHER 6	17
3	**PAGB/T5783-M6x14**	BOLT M6x14	1
4	**PAF20-05000015**	PRESSING PLATE	1
5	**PAT40-05000100**	THERMO SWITCH ASSY	1
6	**PAF20-05000700**	THERMOSTAT COVER ASSY	1
7	**PAF20-05000701**	COVER, THERMOSTAT	1
8	**PAF20-05040005**	GAS, NIPPLE	1
9	**PAF20-05000702**	GASKET, THERMOSTAT COVER	1
10	**PAF4-04070003**	ANODE	2
11	**PAGB/T818-M5x25**	SCREW M5x25	2
12	**PAF20-00000100**	PLUG, OIL LEVEL	1
13	**PAT15-04000010**	THERMOSTAT	1
14	**PAHT2.5x50**	CLAMP	2
15	**PAF20-05000016**	PIPE	1
16	**PAF20-05010002**	NIPPLE	1
17	**PAF20-05010000**	CRANKCASE ASSY	1

Nº	Ref.	Description	Quanty
18	**PAF15-00000006**	PIN Ø6x12	4
19	**PAT20-06000028**	BOLT M8x65	4
20	**PAGB/T97.1-8**	WASHER 8	4
21	**PAF20-05010007**	BOLT M6x40	6
22	**PAF20-00000010**	GASKET, CRANKCASE	1
23	**PAF15-07010026**	ANODE	1
24	**PAGB/T820-M4x12**	SCREW M4x12	1
25	**PAF15-07010003**	BOLT, UNION	1
26	**PAF15-07010023**	OIL CLEANER	1
27	**PAF15-07010100**	OIL PRESSURE SWITCH ASSY	1
28	**PAF20-05000602**	GASKET COVER	1
29	**PAF20-05000600**	EXHAUST OUTER COVER ASSY	1
30	**PAF20-05000601**	OUTER COVER, EXHAUST	1
31	**PAF4-04010102**	NIPPLE	1
32	**PAF15-04000005**	NIPPLE, HOSE	1
33	**PAGB/T3452.1-Ø13xØ2**	O-RING Ø13xØ2	1
34	**PAF20-05030009**	BOLT, ANODE	1

RECAMBIOS MARINOS S.L.

BOAT-parts.se

CULATA / CYLINDER HEAD / TESTATA

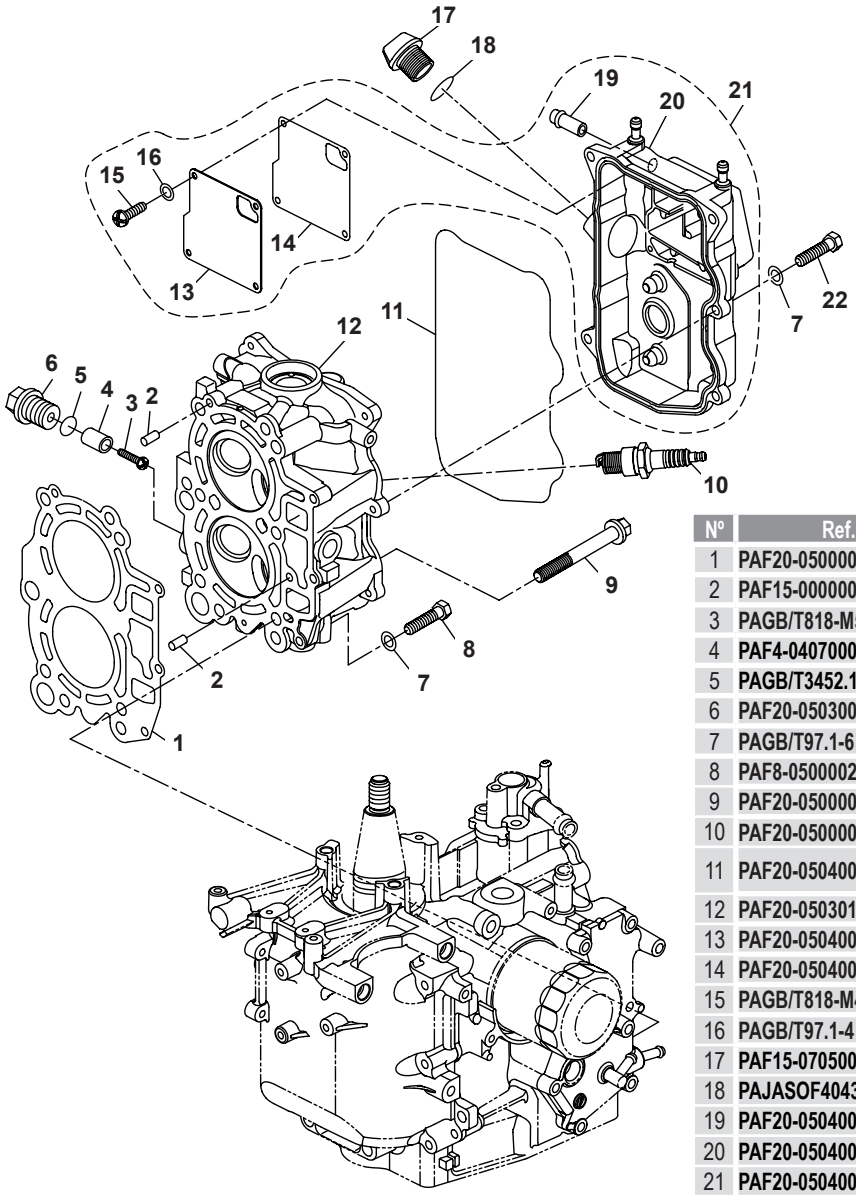

Nº	Ref.	Description	Quanty
1	PAF20-05000001	GASKET, CYLINDER HEAD	1
2	PAF15-00000006	PIN 6x12	2
3	PAGB/T818-M5x25	SCREW M5x25	1
4	PAF4-04070003	ANODE	1
5	PAGB/T3452.1-Ø13xØ2	O-RING Ø13xØ2	1
6	PAF20-05030009	BOLT, ANODE	1
7	PAGB/T97.1-6	WASHER 6	8
8	PAF8-05000022	BOLT M6x25	3
9	PAF20-05000002	BOLT, FLANGE	6
10	PAF20-05000037	SPARK PLUG	2
11	PAF20-05040002	SEAL RING, CYLINDER HEAD COVER	1
12	PAF20-05030100	CYLINDER HEAD ASSY	1
13	PAF20-05040003	COVER, BREATHER	1
14	PAF20-05040004	GASKET, BREATHER COVER	1
15	PAGB/T818-M4x10	SCREW M4x10	4
16	PAGB/T97.1-4	WASHER 4	4
17	PAF15-07050004	PLUG	1
18	PAJASOF40431-025	O-RING	1
19	PAF20-05040005	GAS, NIPPLE	1
20	PAF20-05040001	COVER, CYLINDER HEAD	1
21	PAF20-05040000	CYLINDER HEAD COVER ASSY	1
22	PAGB/T5783-M6x20	BOLT M6x20	5

CIGÜEÑAL Y PISTONES / CRANKSHAFT & PISTON
ALBERO MOTORE E PISITONE

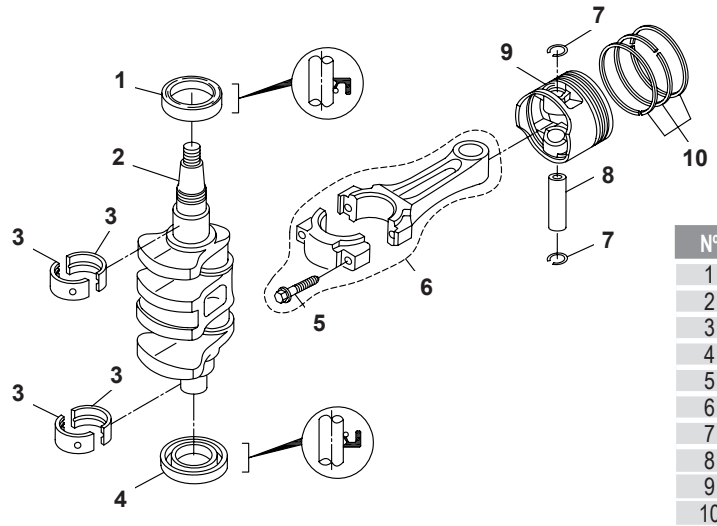

Nº	Ref.	Description	Quanty
1	PAF25-05050021	OIL SEAL 37x50x7	1
2	PAF20-05020004	CRANKSHAFT	1
3	PAF20-05010003	PLANE BEARING	4
4	PAF15-07030006	OIL SEAL A25x44x6.5	1
5	PAF20-05020203	BOLT, CONNECTING ROD	4
6	PAF20-05020200	CONNECTING ROD ASSY	2
7	PAF20-05020002	CIRCLIP	4
8	PAF20-05020003	PIN, PISTON	2
9	PAF20-05020001	PISTON	2
10	PAF20-05020100	PISTON RING ASSY	2

BOAT-parts.se

VÁLVULA / VALVE / VALVOLA

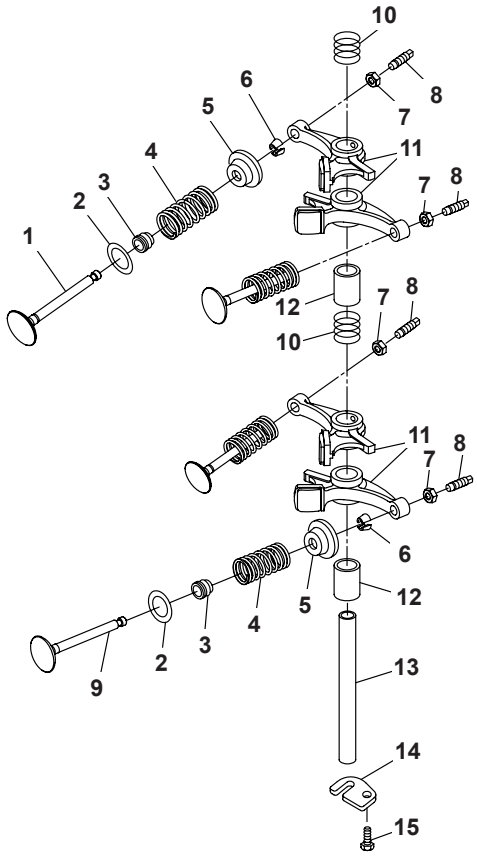

Nº	Ref.	Description	Quanty
1	**PAF20-05030001**	VALVE, INTAKE	2
2	**PAF20-05030003**	SEAT, VALVE SPRING	4
3	**PA166F-010003**	SEAL, VALVE STEM	4
4	**PAF20-05030004**	SPRING, VALVE INNER	4
5	**PAF15-07040006**	RETAINER, VALVE SPRING	4
6	**PAF15-07040007**	COTTER, VALVE	8
7	**PAF15-07040304**	NUT, LOCK	4
8	**PAF15-07040303**	SCREW, VALVE ADJUSTING	4
9	**PAF20-05030002**	VALVE, EXHAUST	2
10	**PAF20-05030007**	SPRING, COMPRESSION	2
11	**PAF20-05030301**	ARM, VALVE ROCKER	4
12	**PAF20-05030006**	COLLAR	2
13	**PAF15-07040015**	SHAFT, ROCKER	1
14	**PAF20-05030008**	PLATE	1
15	**PAGB/T5783-M6x12**	BOLT M6x12	1

DISTRIBUCIÓN / CAMSHAFT / DISTRIBUZIONE

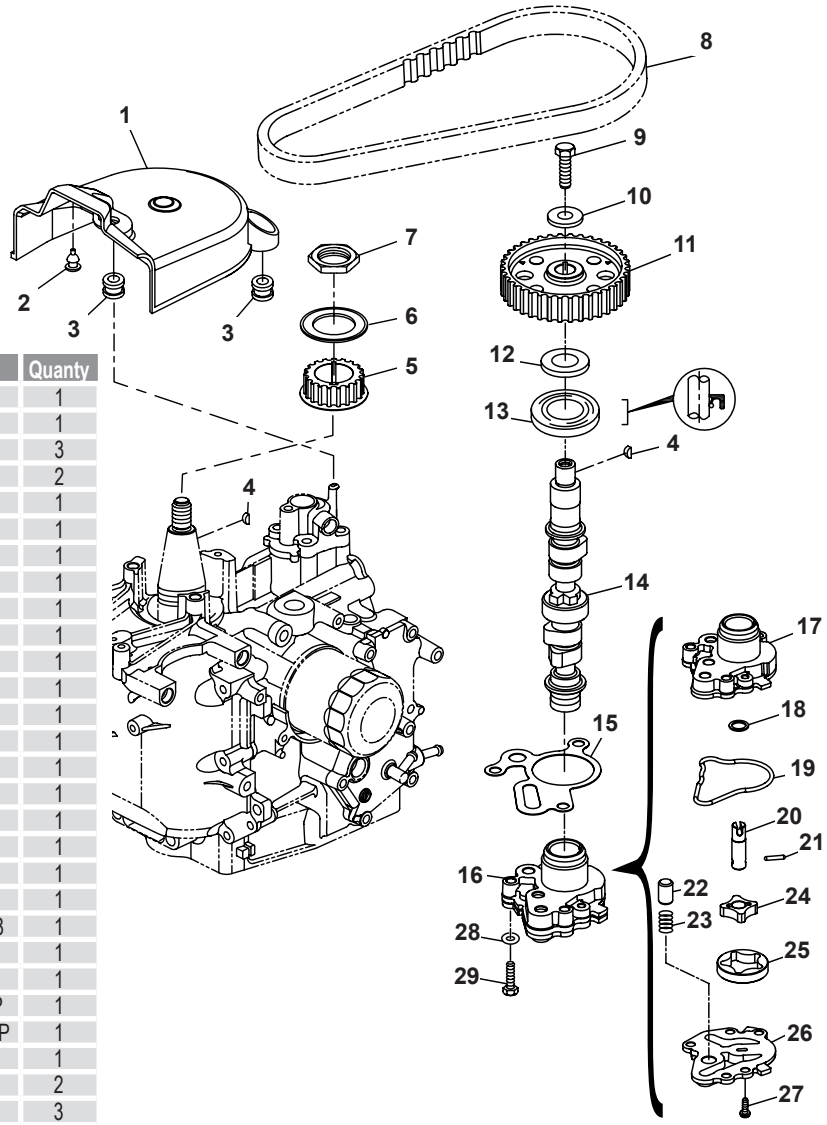

Nº	Ref.	Description	Quanty
1	**PAF20-05000033**	COVER, BELT	1
2	**PAF20-05000036**	PLUG	1
3	**PAF20-05000034**	DAMPER, BELT COVER	3
4	**PAGB/T1099-3x5x13**	KEY	2
5	**PAF20-05000027**	BELT PULLEY, TIMING	1
6	**PAF20-05000028**	COVER	1
7	**PAF20-05000029**	NUT	1
8	**PAF20-05000003**	BELT, TIMING	1
9	**PAGB/T5783-M8x25**	BOLT M8x25	1
10	**PAF20-05030013**	WASHER	1
11	**PAF20-05030012**	BELT PULLEY, DRIVEN	1
12	**PAF20-05030011**	WASHER LOW	1
13	**PAF20-05030005**	OIL SEAL	1
14	**PAF20-05030200**	CAMSHAFT ASSY	1
15	**PAF20-05030010**	MAT, OIL PUMP	1
16	**PAF20-05030400**	OIL PUMP ASSY	1
17	**PAF20-05030401**	BODY, OIL PUMP	1
18	**PAF20-05030403**	WASHER	1
19	**PAF20-05030408**	SEAL RING	1
20	**PAF20-05030402**	SHAFT, OIL PUMP	1
21	**PAGB/T3069-Ø3x16.8**	ROLLER NEEDLE Ø3x16.8	1
22	**PAF15-07110003**	PLUG	1
23	**PAF20-05030407**	SPRING	1
24	**PAF20-05030404**	INNER ROTOR, OIL PUMP	1
25	**PAF20-05030405**	OUTER ROTOR, OIL PUMP	1
26	**PAF20-05030406**	COVER, OIL PUMP	1
27	**PAGB/T823-M6x16**	SCREW M6x16	2
28	**PAGB/T97.1-6**	WASHER 6	3
29	**PAGB/T5783-M6x35**	BOLT M6x25	3

BOAT-parts.se

RECAMBIOS MARINOS S.L.

BOMBA COMBUSTIBLE / FUEL SYSTEM / POMPA BENZINA

Nº	Ref.	Description	Quanty
1	PAF15-07080001	ELEMENT, FILTER	1
2	PAGB/T3452.1-Ø33x2	O-RING Ø33x2	1
3	PAF15-07080002	FILTER CUP	1
4	PAGB/T6170-M8	NUT M8	1
5	PAF20-05000020	FIXED PLATE	1
6	PAGB/T5783-M8x16	BOLT M8x16	1
7	PAF15-07080000	FILTER ASSY	1
8	PAF4-04000030	CLIP "B", FUEL PIPE	6
9	PAF20-05000013	FUEL PIPE Ø5xØ10x130	1
10	PAGB/T5783-M6x20	BOLT M6x20	1
11	PAGB/T97.1-6	WASHER 6	3
12	PAF4-05000200	FUEL PIPE TIE-IN ASSY	1
13	PAGB/T6170-M6	NUT M6	1
14	PAF20-05000021	FUEL PIPE "B" Ø5xØ10x530	1
15	PAF20-05000035	FUEL PIPE "C" Ø5xØ10x270	1
16	PAF20-05050000	FUEL, PUMP ASSY	1
17	PAF20-05000022	BOLT, FUEL PUMP	2
18	PAGB/T3452.1-Ø20.2x2x2.4	O-RING Ø20.2x2.4	1
19	PAGB/T818-M4x32	SCREW M4x32	4
20	PAF4-04090003	COVER FUEL PUMP	1
21	PAF4-04090004	GASKET	1
22	PAF4-04090011	SCREW M3x6	2
23	PAF4-04090005	UNILATERAL, PLATE	2
24	PAF20-05050100	COVER ASSY, FUEL PUMP	1
25	PAF15-04000005	NIPPLE	2
26	PAF20-05050101	COVER, FUEL PUMP	1
27	PAF15-07140100	DIAPHRAGM ASSY	1
28	PAGB/T309-Ø3x12	ROLLER NEEDLE Ø3x12	1
29	PAF15-07140005	SPRING, DIAPHRAGM	1
30	PAF15-07140001	SEAT, FUEL PUMP	1
31	PAF15-07140004	SPRING, PLUNGER	1
32	PAF15-07140003	PLUNGER	1
33	PAGB/T6170-M4	NUT M4	4
34	PAF20-05000026	JOINT 3	1
35	PAF20-05000025	PIPE C Ø5xØ10x250	1
36	PAF20-05000024	PIPE B Ø5xØ10x120	2
37	PAF20-05000023	PIPE A Ø5xØ10x85	1
38	PAF15-05000011	JOINT 3	1
39	PAF20-05000042	PIPE D Ø5xØ10x55	1

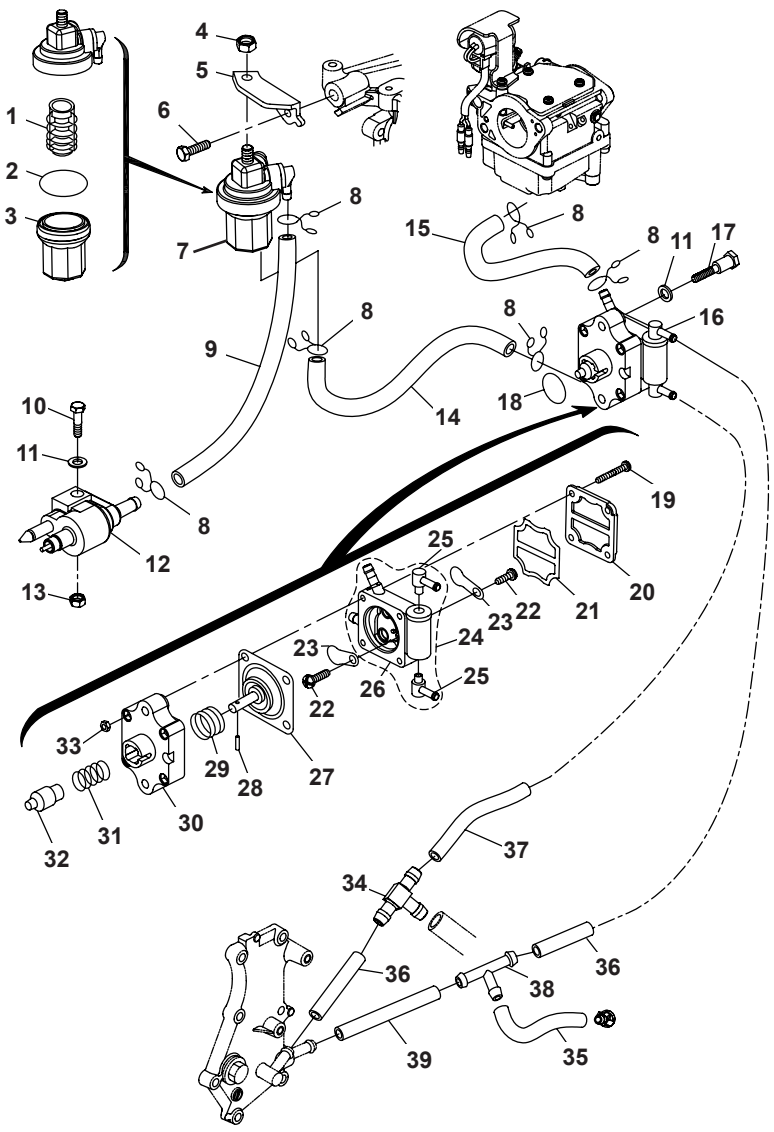

ADMISIÓN / INTAKE / ASPIRAZIONE

Nº	Ref.	Description	Quanty
1	PAF20-05000012	BOLT, INTAKE SILENCER	1
2	PAF20-05000011	DAMPER, INTAKE SILENCER	1
3	PAHT4.2x200	CABLE TIES 4, 2x200	1
4	PAGB/T5782-M6x100	BOLT M6x100	2
5	PAGB/T97.1-6	WASHER 6	8
6	PAF20-05000800	INTAKE SILENCER ASSY	1
7	PAF20-05000031	PIPE, RUBER	1
8	PAF20-05000032	JACKET, PIPE	1
9	PAGB/T3452.1-Ø35xØ2	O-RING Ø35xØ2	1
10	PAF20-05080000	CARBURETOR ASSY	1
11	PAF20-05000008	GASKET, CARBURETOR	2
12	PAF20-05000009	GASKET	1
13	PAGB/T5783-M6x55	BOLT M6x55	4
14	PAGB/T5783-M6x12	BOLT M6x12	2
15	PAT36-04000023	CLAMP	2
16	PAF20-05000007	MANIFOLD, INTAKE	1
17	PAF25-05050016	PIN	2
18	PAF20-05000006	GASKET, INTAKE MANIFOLD	1

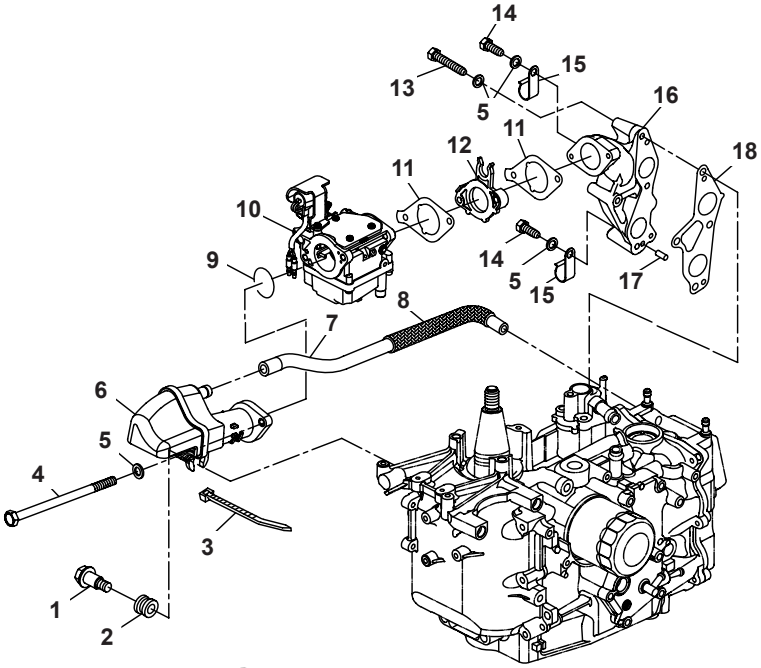

BOAT-parts.se

CARBURADOR / CARBURETOR ASSY / CARBURATORE

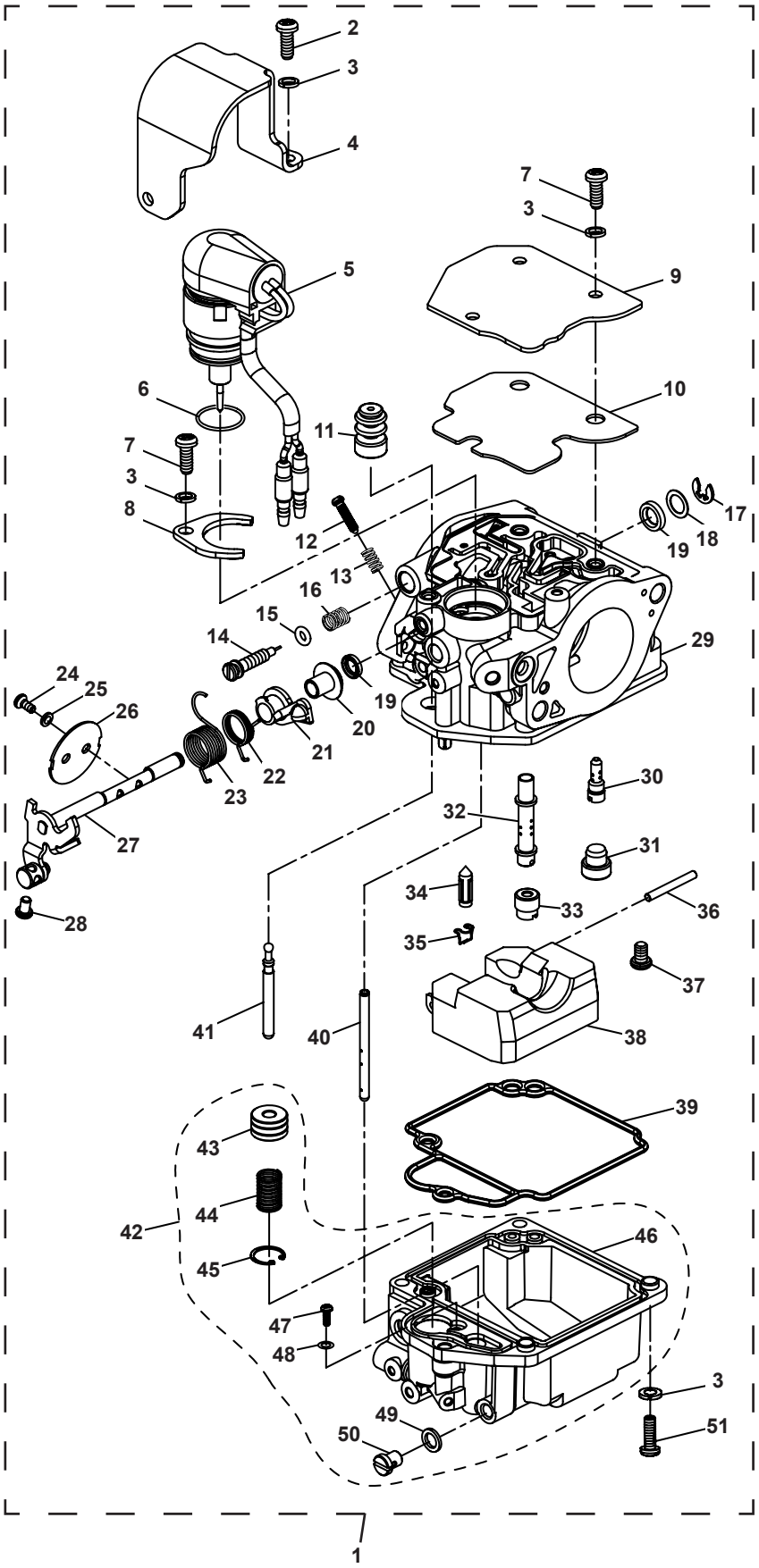

Nº	Ref.	Description	Quanty
1	PAF20-05080000	CARBURETOR ASSY	1
2	PAGB/T818-M4x12	SCREW M4x12	2
3	PAGB/93-4	SPRING WASHER	10
4	PAF20-05080026	COVER	1
5	PAF20-05080200	VALVE ASSY, ELECTRICAL	1
6	PAF20-05080201	O-RING	1
7	PAFBG/T818-M4x10	SCREW M4x10	4
8	PAF20-05080016	PLATE, VALVE	1
9	PAF20-05080003	PLATE	1
10	PAF20-05080002	GASKET	1
11	PAF20-05080004	COVER, RUBBER	1
12	PAF20-05080011	SCREW TOP	1
13	PAF20-05080012	SPRING	1
14	PAF20-05080013	SCREW, AIR ADJUST	1
15	PAF20-05080014	O-RING	1
16	PAF20-05080015	SPRING	1
17	PAGB/T896-4	CIRCLIP 4	1
18	PAF20-05080027	WASHER	1
19	PAF20-05080006	GASKET	2
20	PAF20-05080008	BUSH	1
21	PAF20-05080009	SWING LINK, VALVE	1
22	PAF20-05080010	TWIST SPRING	1
23	PAF20-05080005	TWIST SPRING	1
24	PAGB/T818-M3x6	SCREW M3x6	2
25	PAGB/T93-3	SPRING WASHER 3	2
26	PAF20-05080007	APRON, ACCELERATOR	1
27	PAF20-05080100	SWING LING, ACCELERATOR	1
28	PAGB/T818-M4x6	SCREW M4x6	1
29	PAF20-05080001	CARBURETOR	1
30	PAF20-05080022	JET, AIR SLOW	1
31	PAF20-05080023	CAP, RUBBER	1
32	PAF20-05080020	JER, MAIN	1
33	PAF20-05080021	NOZZLE MAIN	1
34	PAF20-05080017	NEEDLE VALVE	1
35	PAF20-05080025	CLIP, NEEDLE VALVE	1
36	PAF20-05080019	PIN, FLOAT	1
37	PAGB/T818-M3x8	SCREW M3x8	1
38	PAF20-05080018	FLOAT	1
39	PAF20-05080024	GASKET, FLOAT CHAMBER	1
40	PAF20-05080028	JET	1
41	PAF20-05080004	ROD	1
42	PAF20-05080300	FLOAT CHAMBER ASSY	1
43	PAF20-05080302	PLUNGER	1
44	PAF20-05080301	SPRING, PLUNGER	1
45	PAGB/T893.1-8	CLIP 8	1
46	PAF20-05080305	FLOAT CHAMBER	1
47	PAGB/T818-M2x4	SCREW M2x4	1
48	PAGB/T96-2	BIG WASHER 2	1
49	PAF20-05080304	WASHER	1
50	PAF20-05080303	SCREW, OIL OUTLET	1
51	PAGB/T818-M4x16	SCREW M4x16	4

RECAMBIOS MARINOS S.L.

BOAT-parts.se

ELECTRICIDAD 1 / ELECTRICAL 1 / PARTE ELETTRICA 1

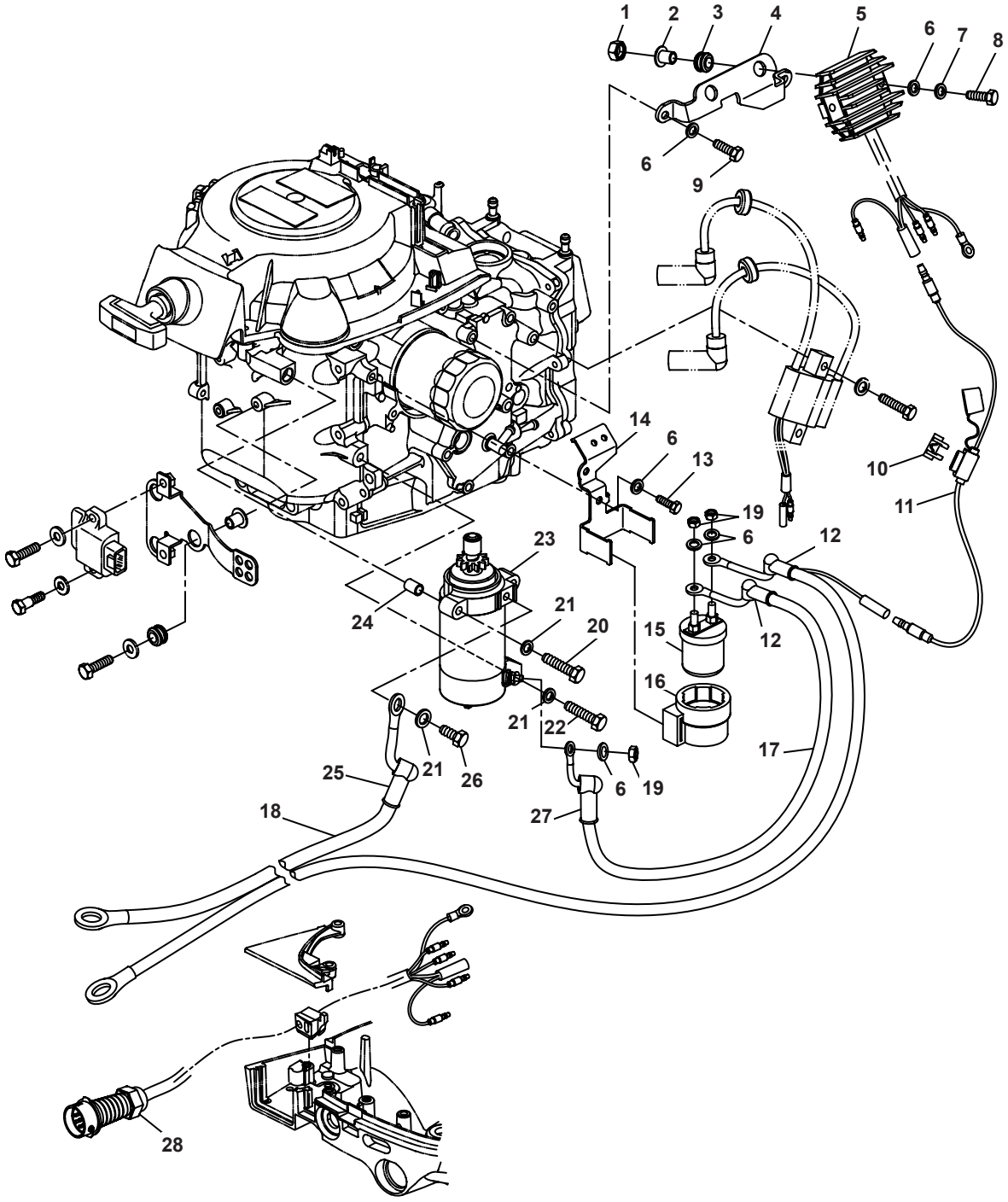

Nº	Ref.	Description	Quanty
1	**PAGB/T6170-M6**	NUT M6	2
2	**PAF20-05000903W**	BUSH	2
3	**PAF20-05000902W**	DAMPER, BUSH	2
4	**PAF20-05000901W**	PLATE, RECTIFIER	1
5	**PAT85-05030300**	RECTIFIER ASSY	1
6	**PAGB/T97.1-6**	WASHER 6	7
7	**PAGB/T93-6**	SPRING, WASHER 6	2
8	**PAGB/T5783-M6x30**	BOLT M6x30	2
9	**PAGB/T5783-M6x16**	BOLT M6x16	2
10	**PAF15-07150001W**	FUSE WIRE (20A)	1
11	**PAF25-05090100W**	FUSE ASSY	1
12	**PAF15-07150501W**	COVERING, POWER SOURCE LINE	2
13	**PAGB/T5783-M6x12**	BOLT M6x12	1
14	**PAF20-05000039W**	SUPPORTING STRUCTURE, RELAY	1

Nº	Ref.	Description	Quanty
15	**PAF15-07150300W**	RELAY, MOTOR	1
16	**PAF25-05170301W**	RELAY, JACKET	1
17	**PAF25-05170400W**	CONNECTION LINE, MOTOR	1
18	**PAF15-07150200W**	CONNECTION LINE, POWER	2
19	**PAGB/T6170-M6**	NUT (COPPER)	3
20	**PAGB/T5782-M8x45**	BOLT M8x45	2
21	**PAGB/T97.1-8**	WASHER 8	4
22	**PAGB/T5782-M8x35**	BOLT M8x35	1
23	**PAF20-05000900W**	STARTING MOTOR	1
24	**PAF20-05000038**	PIN Ø11xØ8.5x11	2
25	**PAF25-05170201W**	JACKET “A”, LINKING WIRE	1
26	**PAGB/T5783-M8x12**	BOLT M8x12	1
27	**PAF25-05170202W**	JACKET “B”, LINKING WIRE	1
28	**PAF15-07150400W**	CDI, CABLE ASSY	1

BOAT-parts.se

ELECTRICIDAD 2 / ELECTRICAL 2 / PARTE ELETTRICA 2

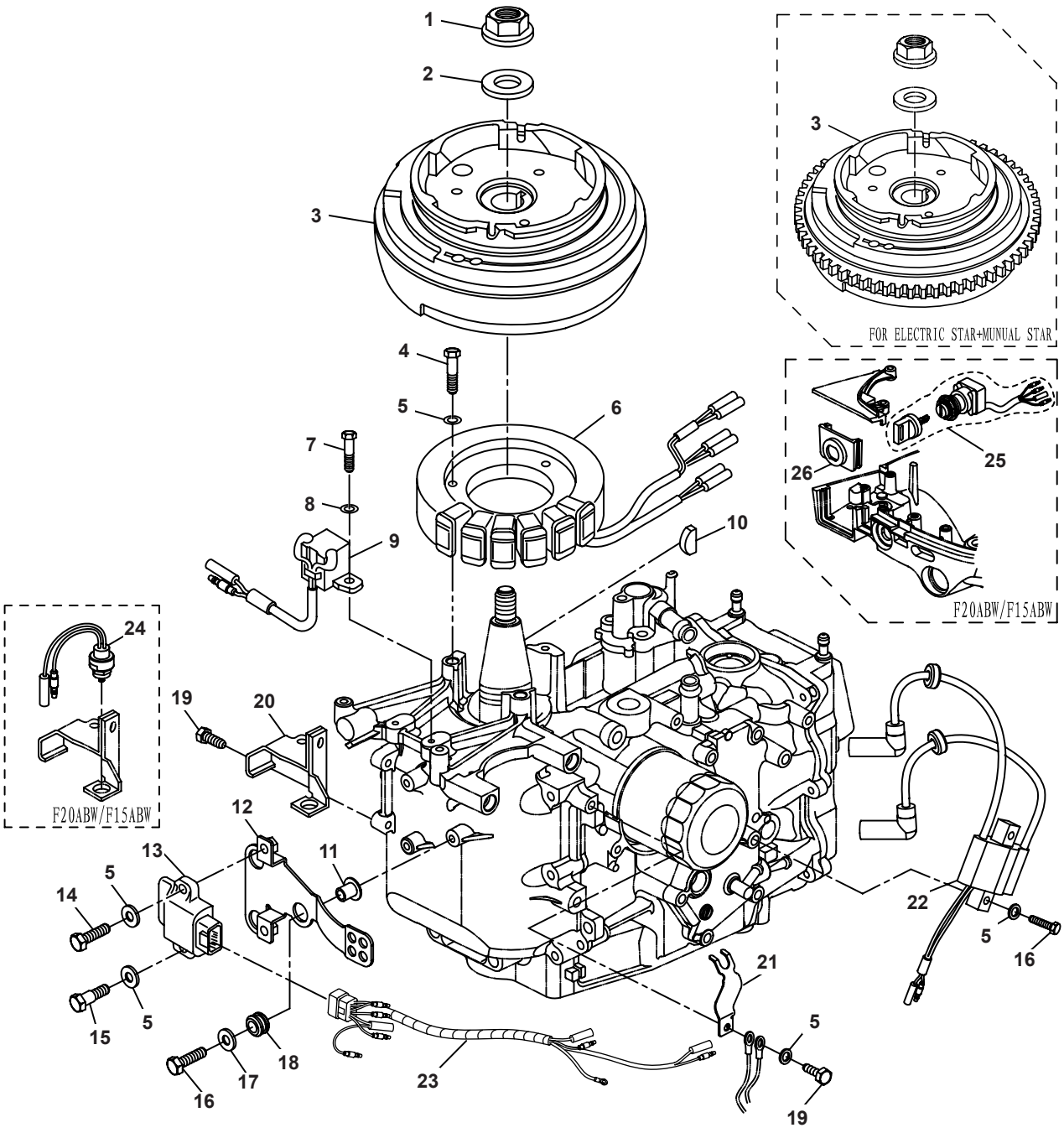

Nº	Ref.	Description	Quanty
1	**PAF15-07000006**	NUT, FLYWHEEL	1
2	**PAF15-07000005**	WASHER, FLYWHEEL NUT	1
3	**PAF20-05000500**	FLYWHEEL ASSY	1
	PAF20-05000500W	FLYWHEEL ASSY (ELECTRICAL)	1
4	**PAGB/T5783-M6x30**	BOLT M6x30	3
5	**PAGB/T97.1-6**	WASHER 6	8
6	**PAF20-05000200**	COIL ASSY	1
7	**PAGB/T5783-M5x12**	BOLT M5x12	2
8	**PAGB/T97.1-5**	WASHER 5	2
9	**PAF20-05000100**	PULSER COIL ASSY	1
10	**PAF15-07000004**	KEY FLYWHEEL	1
11	**PAT40-05000704W**	BUSH	3
12	**PAF20-05000017**	MOUNTED PLATE, C.D.I. UNIT ASSY	1

Nº	Ref.	Description	Quanty
13	**PAF20-05000300**	CDI UNIT ASSY	1
14	**PAGB/T5783-M6x20**	BOLT M6x20	1
15	**PAF20-05000004**	BOLT	1
16	**PAGB/T5783-M6x25**	BOLT M6x25	5
17	**PAGB/T96-6**	BIG WASHER 6	3
18	**PAT40-05000702W**	DAMPER "A"	3
19	**PAGB/T5783-M6x12**	BOLT M6x12	3
20	**PAF20-05000040W**	PLATE	1
21	**PAF20-05000041**	PLATE	1
22	**PAF20-05000400**	IGNITION COIL ASSY	1
23	**PAF20-05000301**	CDI CABLE ASSY	1
24	**PAT20-06000037W**	NEUTRAL SWITCH ASSY	1
25	**PAF15-05000100BW**	START SWITCH	1
26	**PAF20-03000008BW**	SEAT, START SWITCH	

RECAMBIOS MARINOS S.L.

BOAT-parts.se

DIRECCIÓN / STEERING / STERZO

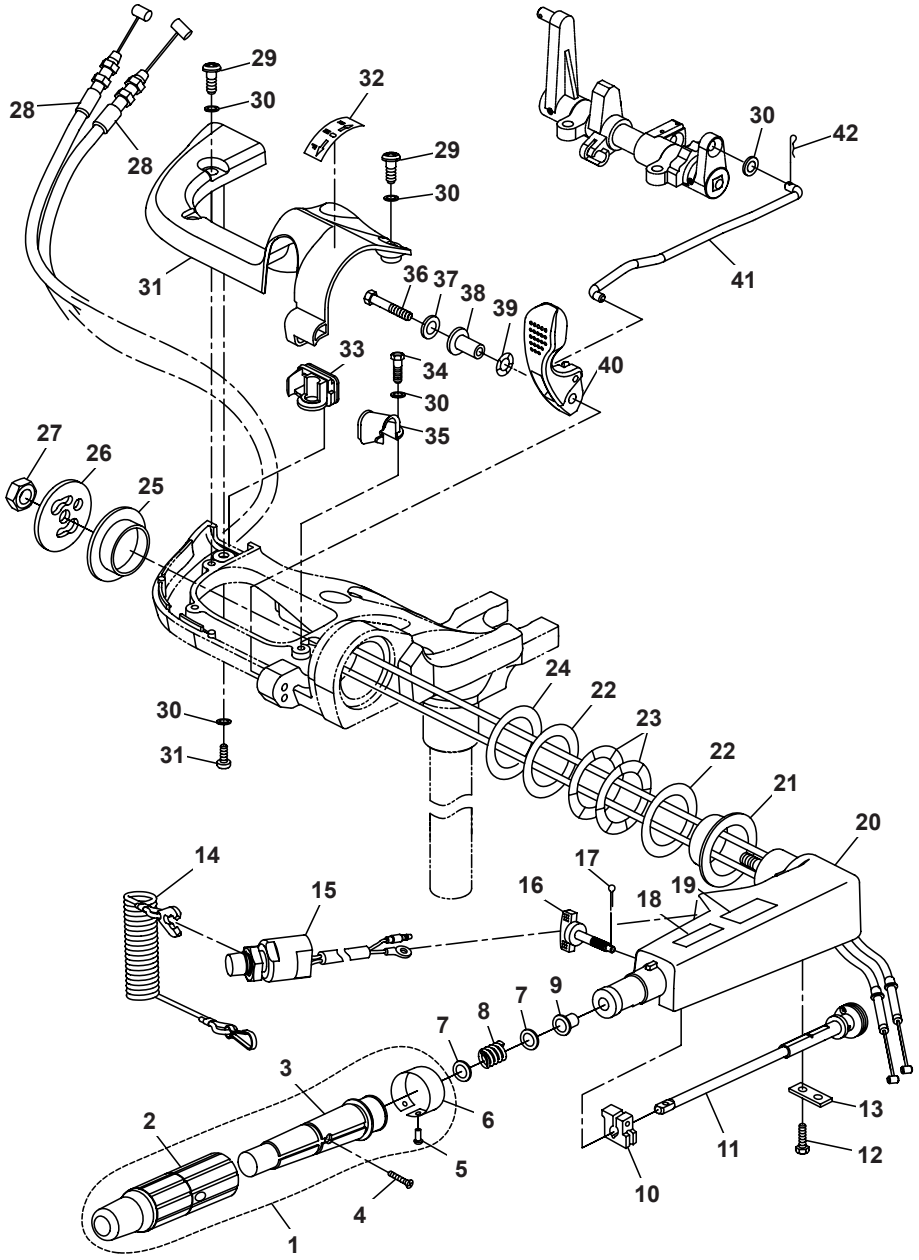

Nº	Ref.	Description	Quanty
1	**PAF20-01020200**	STEERING HANDLE ASSY	1
2	**PAF4-01090302**	RUBBER, STEERING HANDLE	1
3	**PAF20-01020201**	GRIP, STEERING HANDLE	1
4	**PAGB/T820-M5x25**	SCREW M5x25	1
5	**PAGB/T827-Ø2x5**	RIVET Ø2x5	1
6	**PAF4-01090303**	INDICATOR THROTTLE	1
7	**PAGB/T848-10**	SMALL WASHER 10	2
8	**PAF4-01090007**	SPRING	1
9	**PAF4-01090006**	BUSHING	1
10	**PAF4-01090003**	FRICTION	1
11	**PAF15-01030100**	LEVER, THROTTLE	1
12	**PAGB/T5783-M6x20**	BOLT M6x20	2
13	**PAF15-01030005**	STAY	1
14	**PAF4-01090401**	STOPPER, HANG ROPE ASSY	1
15	**PAT40-01020101**	ENGINE STOP SWITCH ASSY	1
16	**PAF15-01030200**	BOLT	1
17	**PAGB/T91-1.6x12**	COTTER PIN 1.6x12	1
18	**PAF4-08000014**	MARK 1	1
19	**PAF4-08000016**	MARK 3	1
20	**PAF15-01030001**	STEERING HANDLE	1
21	**PAF15-01000007**	BUSH, HANDLE (HIGH)	1
22	**PAF15-01000008**	WASHER	2

Nº	Ref.	Description	Quanty
23	**PAF15-01000009**	WASHER, WAVE	2
24	**PAF15-01000012**	WASHER, NYLON	1
25	**PAF15-01000011**	BUSH, HANDLE (LOW)	1
26	**PAF15-01000013**	COVER PLATE, STEERING HANDLE	1
27	**PAGB/T889.2-M10x1.25**	LOCKING NUT M10x1.25	1
28	**PAF20-01020100**	THROTTLE CABLE ASSY	2
29	**PAGB/T823-M6x16**	SCREW M6x16	5
30	**PAGB/T97.1-6**	WASHER 6	7
31	**PAF20-01000003**	COVER, STEERING BRACKET	1
32	**PAF8-08000010**	MARK, GEAR SHIFT	1
33	**PAF20-01000001**	JACKET, RUBBER	1
34	**PAGB/T5783-M6x14**	BOLT M6x14	1
35	**PAF20-01000002**	PRESSING PLATE	1
36	**PAGB/T5783-M6x25**	BOLT M6x25	1
37	**PAF25-00000004**	BIG WASHER 6	1
38	**PAF15-00000008**	BUSHING	1
39	**PAF15-00000009**	WASHER, WAVE	1
40	**PAF20-00000008**	HANDLE, GEAR SHIFT	1
41	**PAF20-00000009**	ROD, CONNECTING	1
42	**PAF15-00000012**	COLLET Ø1.8	1

BOAT-parts.se

SOPORTE MOTOR 1 / BRACKET 1 / SUPPORTO MOTORE 1

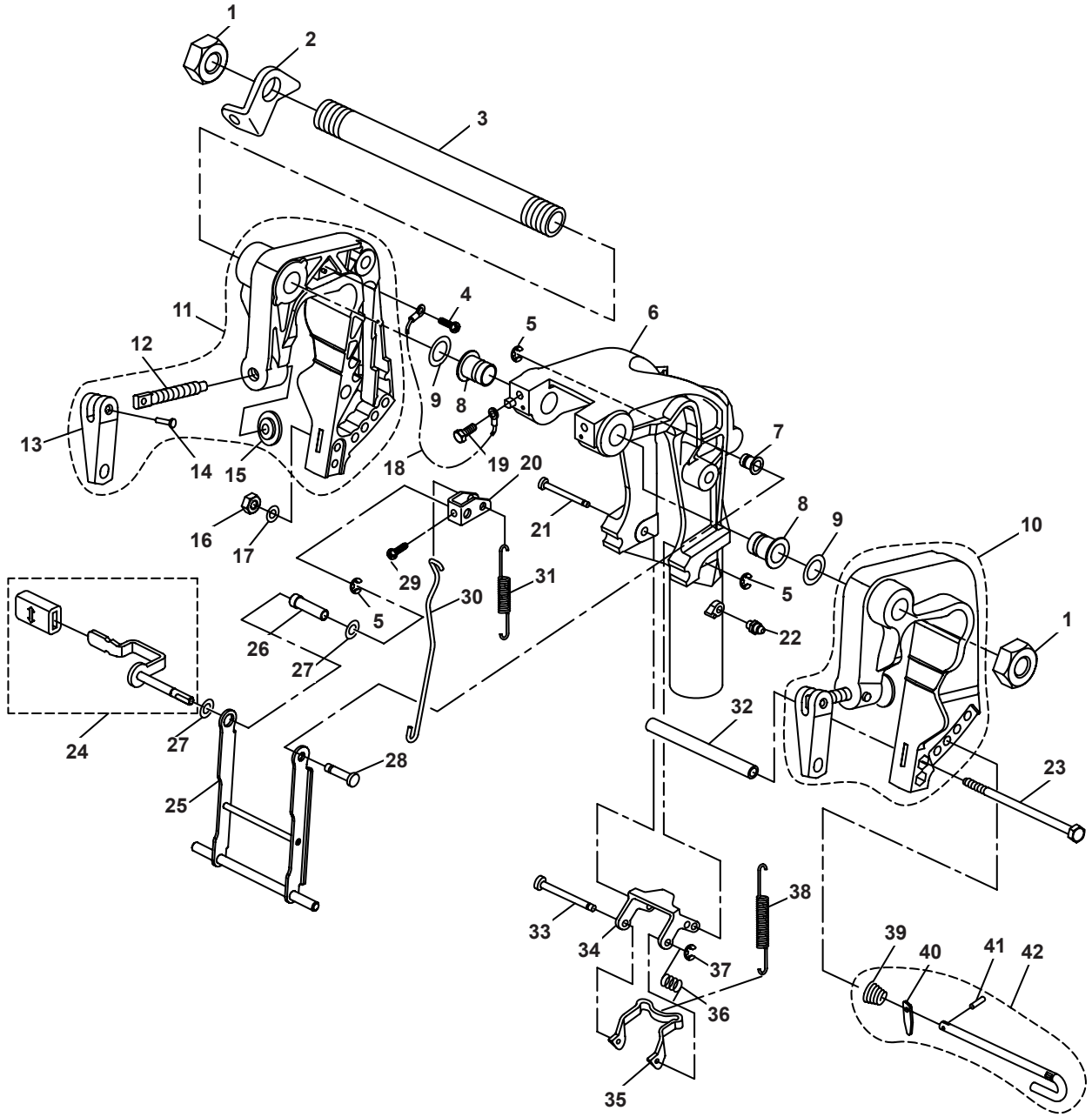

Nº	Ref.	Description	Quanty
1	PAF15-01010007	NUT	2
2	PAF15-01010003	PLATE	1
3	PAF15-01010001	BOLT, CLAMP BRACKET	1
4	PAGB/T818-M6x8	SCREW M6x8	1
5	PAGB/T896-5	CIRCLIP 5	3
6	PAF15-01010301L	BRACKET, ROTARY L	1
	PAF15-01010301S	BRACKET, ROTARY S	
7	PAF15-01010311	BUSH, NYLON	1
8	PAF15-01010302	BUSH, ROTARY BRACKET	2
9	PAF15-01010002	WASHER, NYLON	2
10	PAF15-01010100	LEFT BRACKET ASSY	1
11	PAF15-01010200	RIGHT BRACKET ASSY	1
12	PAF15-01010102	SCREW, CLAMP	2
13	PAF4-01010004	HANDLE	2
14	PAF4-01010005	RIVET, CLAMP HANDLE	2
15	PAF4-01010003	CLAMP, PLATE	2
16	PAGB/T6170-M6	NUT M6	1
17	PAGB/T97.1-6	WASHER 6	1
18	PAF15-01010202	TIGHTWIRE, EARTHING	1
19	PAGB/T5783-M8x12	BOLT M8x12	2
20	PAF15-01010306	LEVER, ANGLE ORIENTATION	1
21	PAF15-01010316	LONG SHAFT, LOCK ANGLE	1

Nº	Ref.	Description	Quanty
22	PAJB/T9740.1-M6	OILER M6	1
23	PAGB/T5782-M6x145	BOLT M6x145	1
24	PAF15-01010305	TILT CLAMP HANDLE ASSY	1
25	PAF15-01010313A	SUPPORT ASSY	1
26	PAF15-01010308	BUSH	1
27	PAF15-01010309	WASHER, NYLON	2
28	PAF15-01010312A	SHAFT SUPPORT	1
29	PAGB/T818-M5x6	SCREW M5x6	1
30	PAF15-01010307A	LINK ROD	1
31	PAF15-01010304	SPRING	1
32	PAF15-01010006	BUSH	1
33	PAF15-01010317-3	SHORT SHAFT, LOCK ANGLE	1
34	PAF15-01010317-2	BRACKET, LOCK ANGLE	1
35	PAF15-01010317-1	INNER BRACKET	1
36	PAF15-01010315	SPRING, TORSION	1
37	PAGB/T896-4	CIRCLIP 4	1
38	PAF15-01010314A	SPRING, TENSION	1
39	PAF15-01010402	CONICAL SPRING	1
40	PAF4-01050003	NOG, PREVENTED UNLOCK	1
41	PAGB/T879.1-Ø3x8	PIN, SPRING Ø3X8	1
42	PAF15-01010400	LIMITATIVE ROD ASSY	1

RECAMBIOS MARINOS S.L.
BOAT-parts.se

SOPORTE MOTOR 2 / BRACKET 2 / SUPPORTO MOTORE 2

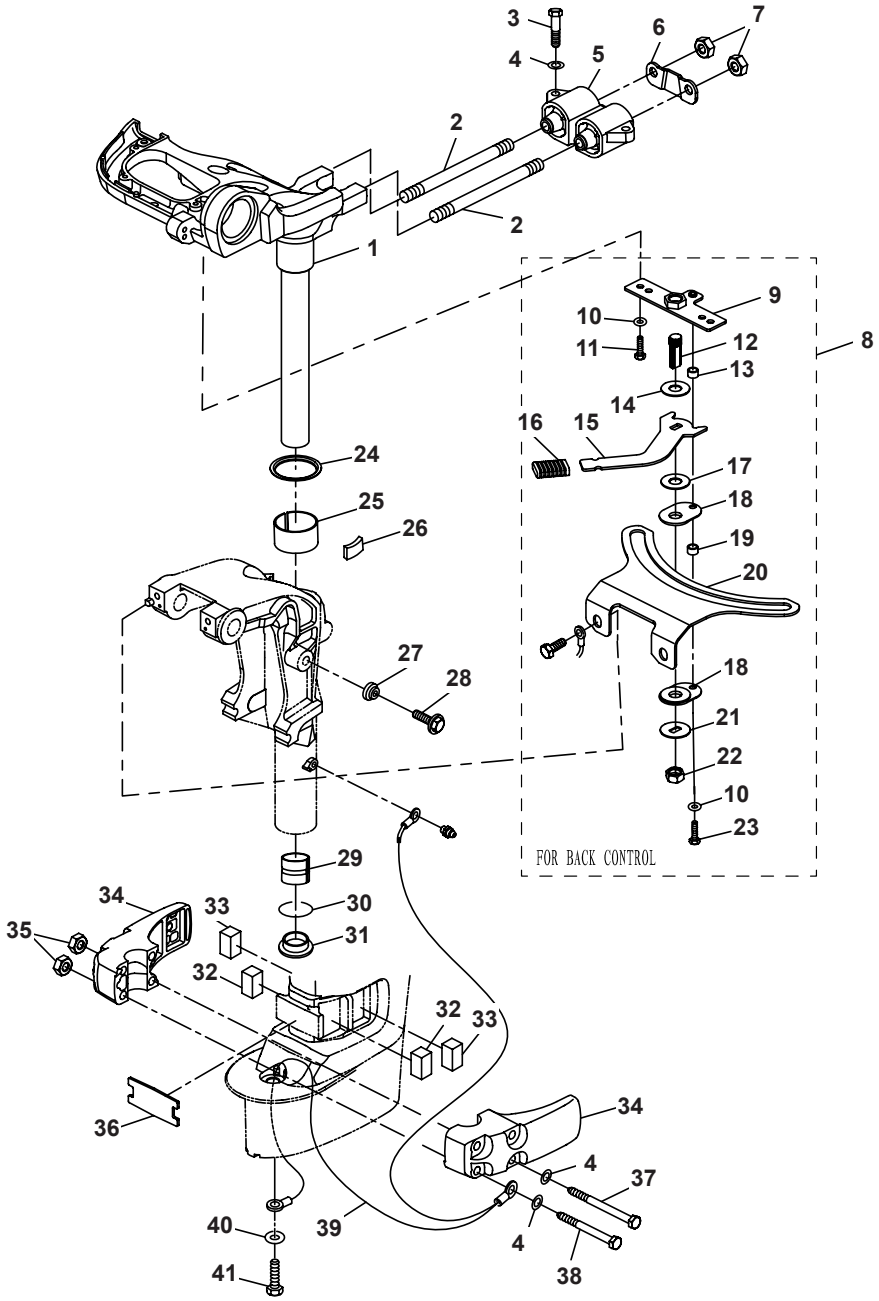

Nº	Ref.	Description	Quanty	Nº	Ref.	Description	Quanty
1	**PAF20-01010000**	STEERING BRACKET ASSY (L)	**1**	21	**PAF20-01030003**	WASHER "B"	**1**
	PAF20-01010000S	STEERING BRACKET ASSY (S)		22	**PAGB/T889.1-M10x1.25**	LOCKING NUT M10x1.25	**1**
2	**PAGB/T900-M10x1.25x82**	BOLT M10x1.25x82	**2**	23	**PAGB/T5783-M5x20**	BOLT M5x20	**1**
3	**PAGB/T5783-M8x30**	BOLT M8x30	**2**	24	**PAF15-01000003**	WASHER, HIGHT	**1**
4	**PAGB/T97.1-8**	WASHER 8	**7**	25	**PAF15-01000001**	BUSH, HIGHT	**1**
5	**PAF20-02020200**	DAMPER ASSY	**1**	26	**PAF15-01000002**	LOCKING BLOCK	**1**
6	**PAF20-00000005**	PLATE	**1**	27	**PAF15-01010303**	SEAL, LOCKING BOLT	**1**
7	**PAGB/T6170-M10x1.25**	NUT M10x1.25	**2**	28	**PAGB/T5787-M6x20**	BOLT, FLANGE	**1**
8	**PAF20-01030000**	STEERING FRICTION ASSY	**1**	29	**PAF15-01000004**	BUSH, LOW	**1**
9	**PAF20-01030001**	FIXED PLATE "A"	**1**	30	**PAGB/T3452.1-Ø30x3.55**	O-RING Ø30x3.55	**1**
10	**PAGB/T97.1-5**	WASHER 5	**3**	31	**PAF15-01000006**	WASHER, LOW	**1**
11	**PAGB/T5783-M5x16**	BOLT M5x16	**3**	32	**PAF20-00000002**	DAMPER BLOCK "A"	**2**
12	**PAF20-01030002**	SCREW, ADJUSTING	**1**	33	**PAF20-00000003**	DAMPER BLOCK "B"	**2**
13	**PAF20-01030008**	BUSH "A"	**1**	34	**PAF20-00000001**	COVER, MOUNT DAMPER	**2**
14	**PAF20-01030011**	WASHER "A"	**1**	35	**PAGB/T6177-M8**	NUT M8, FLANGE	**4**
15	**PAF20-01030004**	HANDLE, ADJUSTING	**1**	36	**PAF20-00000004**	DAMPER BLOCK, FRONT	**1**
16	**PAF20-01030005**	JACKET, HANDLE	**1**	37	**PAGB/T5782-M8x105**	BOLT M8x105	**2**
17	**PAF20-01030006**	WASHER, NYLON	**1**	38	**PAGB/T5782-M8x85**	BOLT M8x85	**2**
18	**PAF20-01030007**	FRICTION	**2**	39	**PAF20-02000002**	WIRE, LEAD	**1**
19	**PAF20-01030010**	BUSH "B"	**1**	40	**PAGB/T97.1-6**	WASHER 6	**1**
20	**PAF20-01030009**	FIXED PLATE "B"	**1**	41	**PAGB/T5783-M6x10**	BOLT M6x10	**1**

BOAT-parts.se

COLA SUPERIOR / UPPER CASING / PARTE ALTA PIEDE

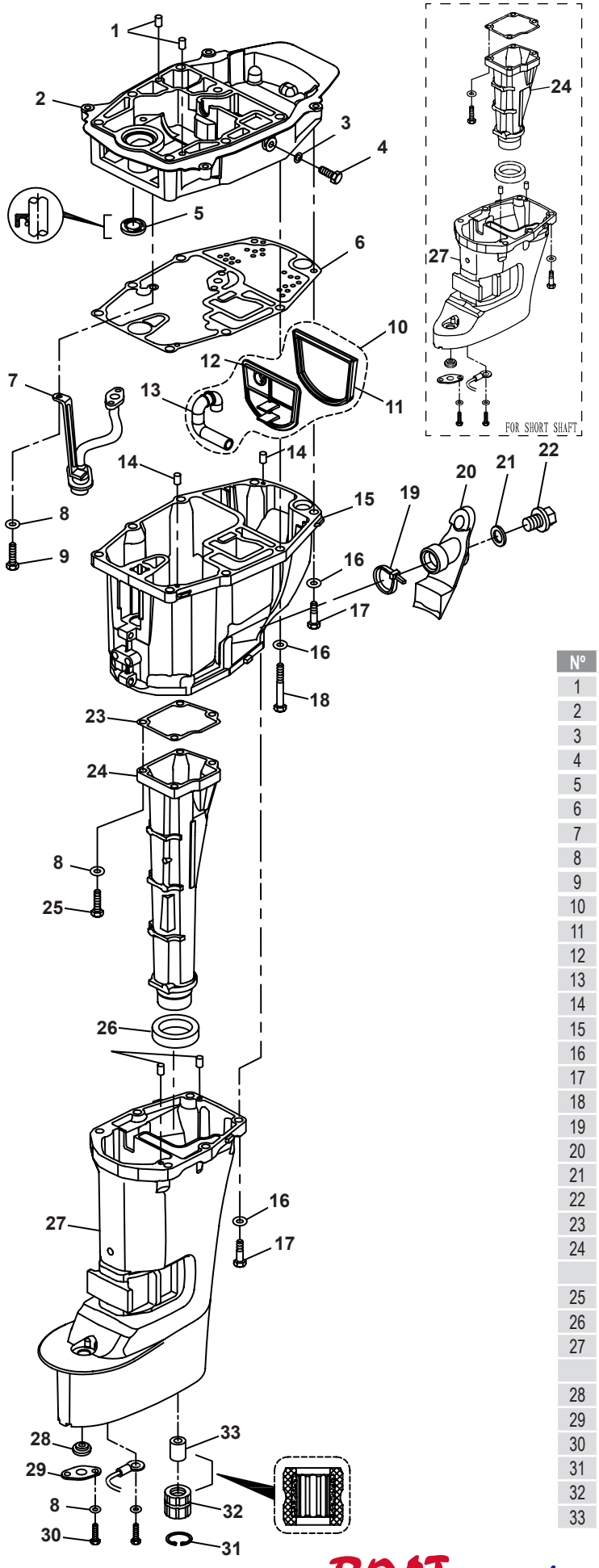

Nº	Ref.	Description	Quanty
1	PAF15-00000006	PIN Ø6x12	2
2	PAF20-02020001	SEAT, OUTLET MANIFOLD	1
3	PAF4-04000006	WASHER	1
4	PAGB/T5783-M8x14	BOLT M8x14	1
5	PAF15-04000008	OIL SEAL 13x25x6	1
6	PAF20-02020002	GASKET	1
7	PAF20-02020100	OIL STRAINER ASSY	1
8	PAGB/T97.1-6	WASHER 6	8
9	PAGB/T5783-M6x16	BOLT M6x16	2
10	PAF20-02010100	SEPARATE PLATE ASSY	1
11	PAF20-02010102	SEAL, RUBBER	1
12	PAF20-02010101	SEPARATE PLATE	1
13	PAF20-02010103	PIPE, RUBBER	1
14	PAF15-00000013	PIN Ø4x12	4
15	PAF20-02010001	OIL PAN	1
16	PAGB/T97.1-8	WASHER 8	14
17	PAGB/T5783-M8x30	BOLT M8x30	8
18	PAGB/T5782-M8x85	BOLT M8x85	6
19	PAHT2.5x50	CLAMP	1
20	PAF20-02010002	RUBBER SLEEVE, OIL OUTLET	1
21	PAF15-04000003	WASHER	1
22	PAF15-04000002	BOLT, OIL OUTLET	1
23	PAF20-02010004	GASKET, OUTLET MANIFOLD	1
24	PAF20-02010003L	OUTLET MANIFOLD (L)	1
	PAF20-02010003S	OUTLET MANIFOLD (S)	
25	PAGB/T5783-M6x25	BOLT M6x25	4
26	PAF20-02010005	DAMPER, OUTLET MANIFOLD	1
27	PAF20-02000001L	UPPER CASING (L)	1
	PAF20-02000001S	UPPER CASING (S)	
28	PAF20-02000003	SEAL, RUBBER	1
29	PAF20-02000004	PLATE	1
30	PAGB/T5783-M6x10	BOLT M6x10	1
31	PAGB/T893.1-30	CIRCLIP	1
32	PAT40-02000004	SHEATH, RUBBER	1
33	PATE15-02000016	BUSH	1

RECAMBIOS MARINOS S.L.

BOAT-parts.se

COLA INFERIOR 1 / LOWER CASING & DRIVE 1 / PARTE INFERIORE PIEDE 1

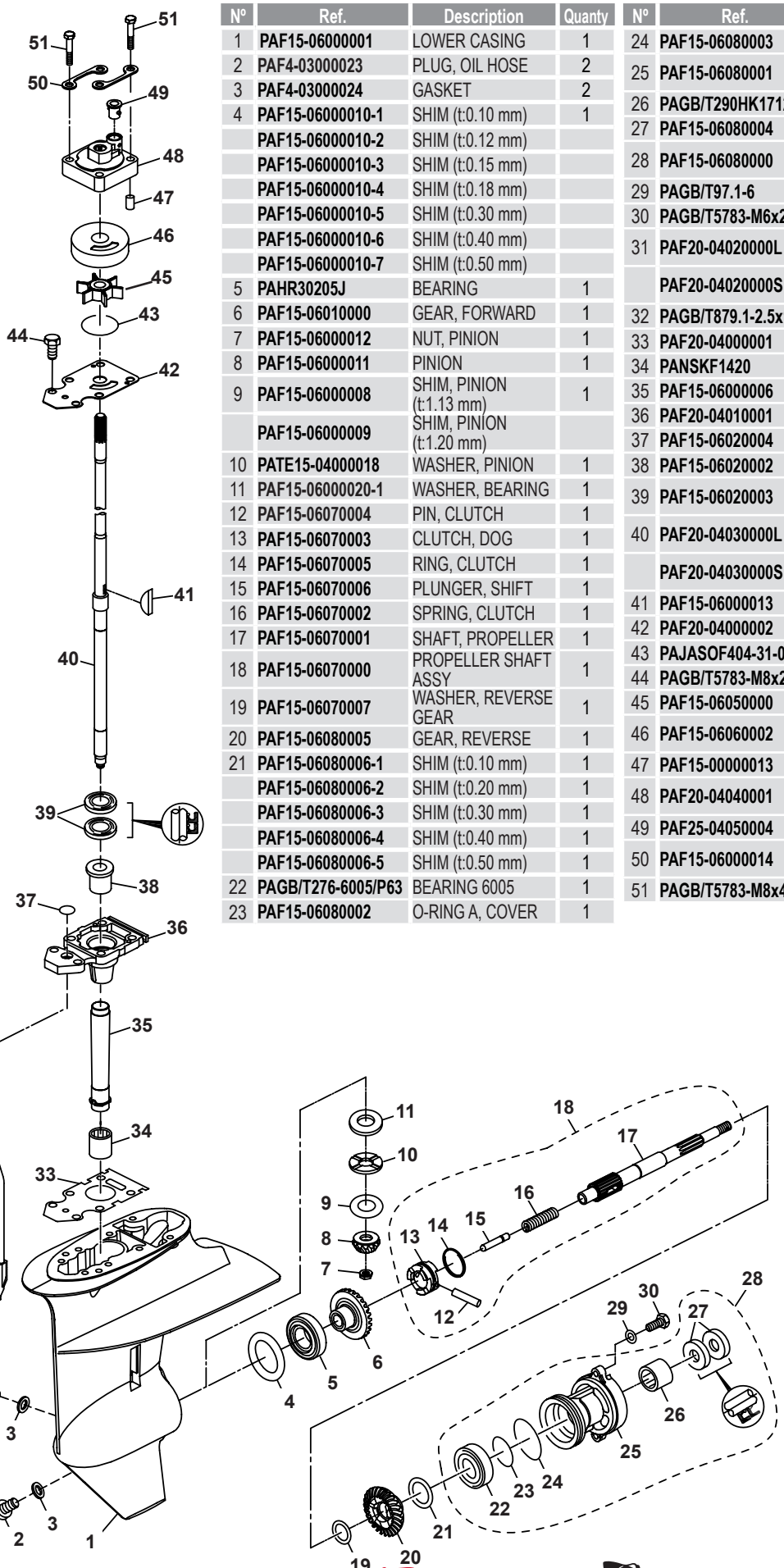

Nº	Ref.	Description	Quanty
1	PAF15-06000001	LOWER CASING	1
2	PAF4-03000023	PLUG, OIL HOSE	2
3	PAF4-03000024	GASKET	2
4	PAF15-06000010-1	SHIM (t:0.10 mm)	1
	PAF15-06000010-2	SHIM (t:0.12 mm)	
	PAF15-06000010-3	SHIM (t:0.15 mm)	
	PAF15-06000010-4	SHIM (t:0.18 mm)	
	PAF15-06000010-5	SHIM (t:0.30 mm)	
	PAF15-06000010-6	SHIM (t:0.40 mm)	
	PAF15-06000010-7	SHIM (t:0.50 mm)	
5	PAHR30205J	BEARING	1
6	PAF15-06010000	GEAR, FORWARD	1
7	PAF15-06000012	NUT, PINION	1
8	PAF15-06000011	PINION	1
9	PAF15-06000008	SHIM, PINION (t:1.13 mm)	1
	PAF15-06000009	SHIM, PINION (t:1.20 mm)	
10	PATE15-04000018	WASHER, PINION	1
11	PAF15-06000020-1	WASHER, BEARING	1
12	PAF15-06070004	PIN, CLUTCH	1
13	PAF15-06070003	CLUTCH, DOG	1
14	PAF15-06070005	RING, CLUTCH	1
15	PAF15-06070006	PLUNGER, SHIFT	1
16	PAF15-06070002	SPRING, CLUTCH	1
17	PAF15-06070001	SHAFT, PROPELLER	1
18	PAF15-06070000	PROPELLER SHAFT ASSY	1
19	PAF15-06070007	WASHER, REVERSE GEAR	1
20	PAF15-06080005	GEAR, REVERSE	1
21	PAF15-06080006-1	SHIM (t:0.10 mm)	1
	PAF15-06080006-2	SHIM (t:0.20 mm)	1
	PAF15-06080006-3	SHIM (t:0.30 mm)	1
	PAF15-06080006-4	SHIM (t:0.40 mm)	1
	PAF15-06080006-5	SHIM (t:0.50 mm)	1
22	PAGB/T276-6005/P63	BEARING 6005	1
23	PAF15-06080002	O-RING A, COVER	1

Nº	Ref.	Description	Quanty
24	PAF15-06080003	O-RING B, COVER	1
25	PAF15-06080001	COVER, LOWER CASING	1
26	PAGB/T290HK1712	BEARING HK1712	1
27	PAF15-06080004	OIL SEAL	2
28	PAF15-06080000	COVER ASSY, LOWER CASING	1
29	PAGB/T97.1-6	WASHER 6	2
30	PAGB/T5783-M6x20	BOLT M6x20	2
31	PAF20-04020000L	CAM ASSY, SHIFT ROD (L)	1
	PAF20-04020000S	CAM ASSY, SHIFT ROD (S)	1
32	PAGB/T879.1-2.5x14	PIN 2.5x14	1
33	PAF20-04000001	GASKET BASE	1
34	PANSKF1420	BEARING	1
35	PAF15-06000006	BUSHING NYLON	1
36	PAF20-04010001	BASE, DRIVE SHAFT	1
37	PAF15-06020004	O-RING	1
38	PAF15-06020002	BEARING	1
39	PAF15-06020003	OIL SEAL, DRIVE SHAFT	2
40	PAF20-04030000L	DRIVE SHAFT ASSY (L)	1
	PAF20-04030000S	DRIVE SHAFT ASSY (S)	
41	PAF15-06000013	KEY, WOODRUFF	1
42	PAF20-04000002	OUTER PLATE	1
43	PAJASOF404-31-045	O-RING	1
44	PAGB/T5783-M8x25	BOLT M8x25	2
45	PAF15-06050000	IMPELLER ASSY	1
46	PAF15-06060002	INNER SHELL, WATER PUMP	1
47	PAF15-00000013	DOWEL PIN Ø4x12	2
48	PAF20-04040001	WATER PUMP HOUSING	1
49	PAF25-04050004	SEAL, WATER PIPE	1
50	PAF15-06000014	FIXED PLATE, WATER PUMP	2
51	PAGB/T5783-M8x45	BOLT M8x45	4

BOAT-parts.se

COLA INFERIOR 2 / LOWER CASING & DRIVE 2 / PARTE INFERIORE PIEDE 2

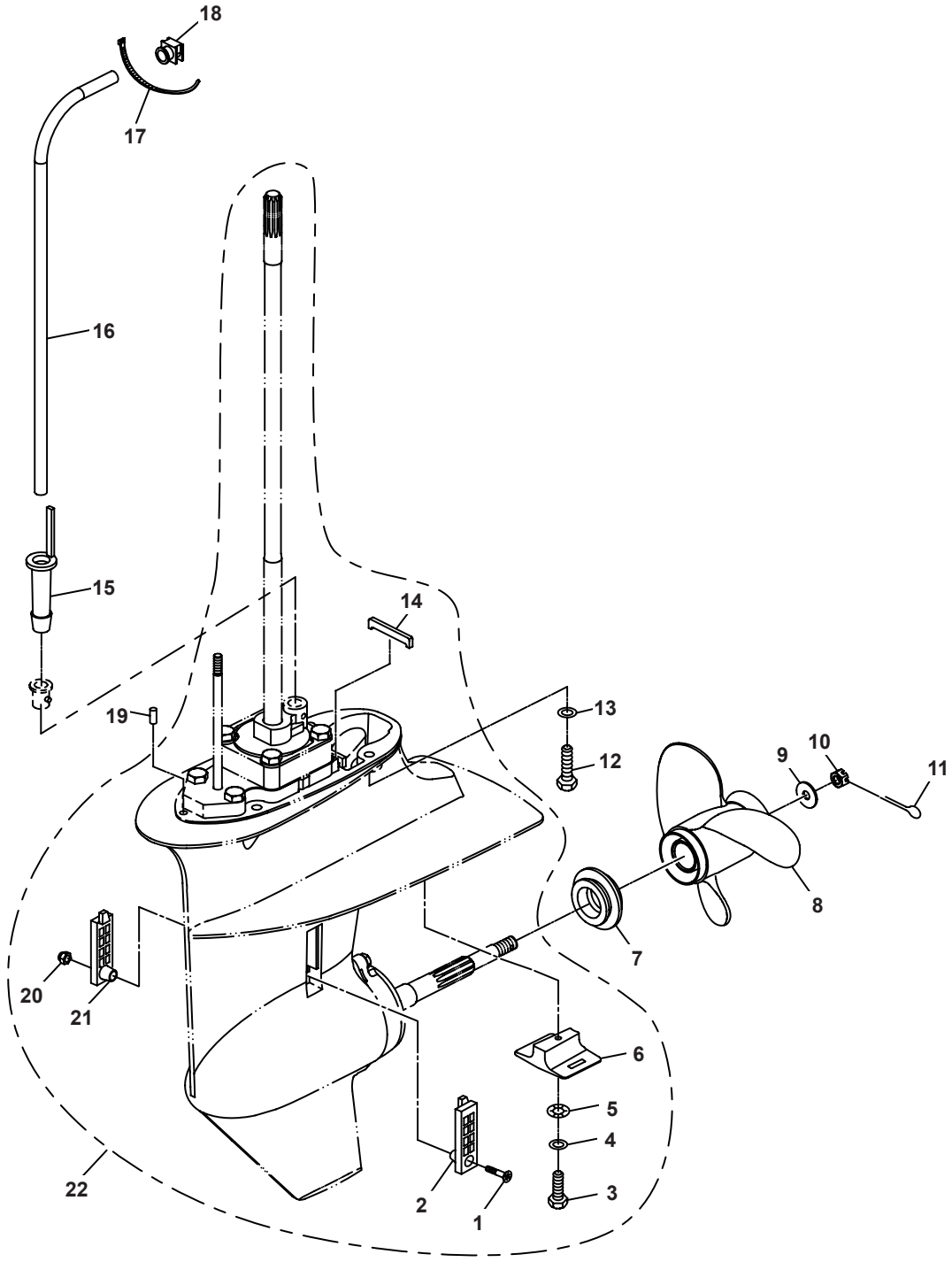

Nº	Ref.	Description	Quanty
1	**PAGB/T820-M5x20**	SCREW M5x20	1
2	**PAF15-06000003**	WATER INLET B	1
3	**PAGB/T5783-M6x30**	BOLT M6x30	1
4	**PAGB/T97.1-6**	WASHER 6	1
5	**PAGB/T861.1-6**	WASHER, LOCKING 6	1
6	**PAF15-06000004**	ANODE	1
7	**PAF15-06000015**	CUSHION, PROPELLER	1
8	**PAF15-06090000**	PROPELLER ASSY	1
9	**PAGB/T96-10**	BIG WASHER 10	1
10	**PAF15-06000016**	NUT, HEXAGON	1
11	**PAGB/T91-2.5x20**	PIN, COTTER 2.5x20	1
12	**PAGB/T5783-M8x30**	BOLT, HEXAGON M8x30	4

Nº	Ref.	Description	Quanty
13	**PAGB/T97.1-8**	WASHER 8	4
14	**PAF15-06020005**	SEAL, RUBBER	1
15	**PAF20-02000005**	BUSH TUBE	1
16	**PAF20-02000101L**	TUBE, WATER (L)	1
	PAF20-02000101S	TUBE, WATER (S)	
17	**PAHT-2.5x50**	CABLE TIES 2.5x50	1
18	**PAF20-02000007**	SEAL, WATER TUBE	1
19	**PAF15-00000013**	DOWEL PIN Ø4x12	2
20	**PAGB/T6182-M5**	NUT, LOCKING M5	1
21	**PAF15-06000002**	WATER INLET A	1
22	**PAF20-04000000L**	LOWER CASING ASSY (L)	1
	PAF20-04000000S	LOWER CASING ASSY (S)	1

RECAMBIOS MARINOS S.L.

BOAT-parts.se

CAJA DE MANDOS / CONTROL BOX ASSY / SCATOLA COMANDI

Nº	Ref.	Description	Quanty
1	**PAF15-13000000W**	CONTROL BOX ASSY	1
2	**PAHT2.5x60**	CLAMP	2
3	**PAF15-13000200W**	STARTING SWICH ASSY	1
4	**PAF15-13000100W**	CONTROL CABLE ASSY	1
5	**PAF15-11000002W**	PLATE, CONTROL BOX	1
6	**PAGB/T819.2-M5x12**	SCREW PAN HEAD M5x12	2
7	**PAF15-13020007W**	THROTTLE HANDLE, INCHING	1
8	**PAF15-13000005W**	BUSH, CAM	2
9	**PAF15-13020006W**	BUSH, HANDLE	1
10	**PAF15-11000001W**	BLOCK, RUBBER	1
11	**PAF15-13000014W**	JACKET, CABLE	1
12	**PAF4-01090401**	STOPPER, HANG ROPE ASSY	1
13	**PAF15-13020400W**	ENGINE STOP SWICH ASSY	1
14	**PAF15-13000203W**	INSULATED PLUG “B”	2
15	**PAF15-13000202W**	INSULATED PLUG “A”	1
16	**PAF15-13020001W**	COVER, CONTROL BOX	1
17	**PAF15-13000013W**	SMALL COVER, CONTROL BOX	1
18	**PAF15-13020005W**	WASHER, WAVE	1
19	**PAF15-13020100W**	LOCKED DISK ASSY	1
20	**PAF15-13020002W**	TORSION SPRING	1
21	**PAF15-13020003W**	EACH LOCKED PULLEY	1
22	**PAF15-13020004W**	PLATE, PULLEY SPRING	1
23	**PAGB/T818-M4x6**	PAN HEAD SCREW M4x16	2
24	**PAF15-13020000W**	COVER ASSY, CONTROL BOX	1
25	**PAGB/T5783-M8x30**	BOLT M8x30	1
26	**PAGB/T97.1-8**	WASHER 8	1
27	**PAF15-13000500W**	MACHINE CONTROL ACCELEROGRAPH	1
28	**PAF15-10000007W**	WASHER	1
29	**PAGB/T896-6**	PIN, COTTER 8	3
30	**PAF25-07000007W**	CONTROL CABLE TIE-IN “B”	2
31	**PAF15-13000002W**	CAM MECHANISM	1
32	**PAGB/T818-M3x14**	PAN HEAD SCREW M3x14	2

Nº	Ref.	Description	Quanty
33	**PAF15-13000800W**	INCHING SWITCH	1
34	**PAF15-13000003W**	PLATE	1
35	**PAF15-13000004W**	PULLEY	1
36	**PAF15-13000001W**	SHIFT SPING PLATE “B”	5
37	**PAF15-12000016W**	MARK 16	1
38	**PAGB/T6170-M6**	NUT M6	4
39	**PAF15-13000008W**	WEARABLE PLATE CAM MECHANISM	1
40	**PAF15-13000700W**	SHIFT SWING LINK	1
41	**PAF15-13000601W**	ADJUSTER FASTNESS ASSY	1
42	**PAGB/T5783-M5x25**	BOLT M5x25	2
43	**PAGB/T6170-M5**	NUT M5	2
44	**PAF15-13000300W**	BUZZER ASSY	1
45	**PAF15-13000602W**	ADJUSTER PIN	1
46	**PAGB/T5287-6**	BIG WASHER 6	3
47	**PAF15-13000006W**	WEARABLE PLATE	1
48	**PAF15-13000011W**	BUSH, SHIFT SWING LINK	1
49	**PAF15-13000012W**	BRACKET, CONTROL BOX	1
50	**PAF15-12000013W**	MARK 13	1
51	**PAF15-13000015W**	COVER, WATERPROOF	1
52	**PAF15-13010010W**	BLOCK, CONTROL HANDLE	1
53	**PAGB/T956.1-5**	WASHER LOCKED 5	2
54	**PAGB/T819.2-M5x18**	SCREW, PAN HEAD M5x18	7
55	**PAF15-13010003W**	JAM, BUTTON	2
56	**PAF15-13010001W**	CONTROL, HANDLE	1
57	**PAF15-13010002W**	CONTROL HANDLEBAR	1
58	**PAGB/T84.5-ST4.8x12**	SCREW, PAN HEAD ST4.8x12	1
59	**PAGB/T818-M4x10**	SCREW, PAN HEAD M4x10	3
60	**PAF15-13010009W**	COVER, CONTROL HANDLE	1
61	**PAF15-13010005W**	SPRING, COMPRESSION	1
62	**PAF15-13010004W**	PART, ORIENTATION CONTROL	1
63	**PAF15-13010008W**	PLATE, ORIENTATION PART	1
64	**PAGB/T820-M6x90**	SCREW, PAN HEAD M6x90	3

BOAT-parts.se

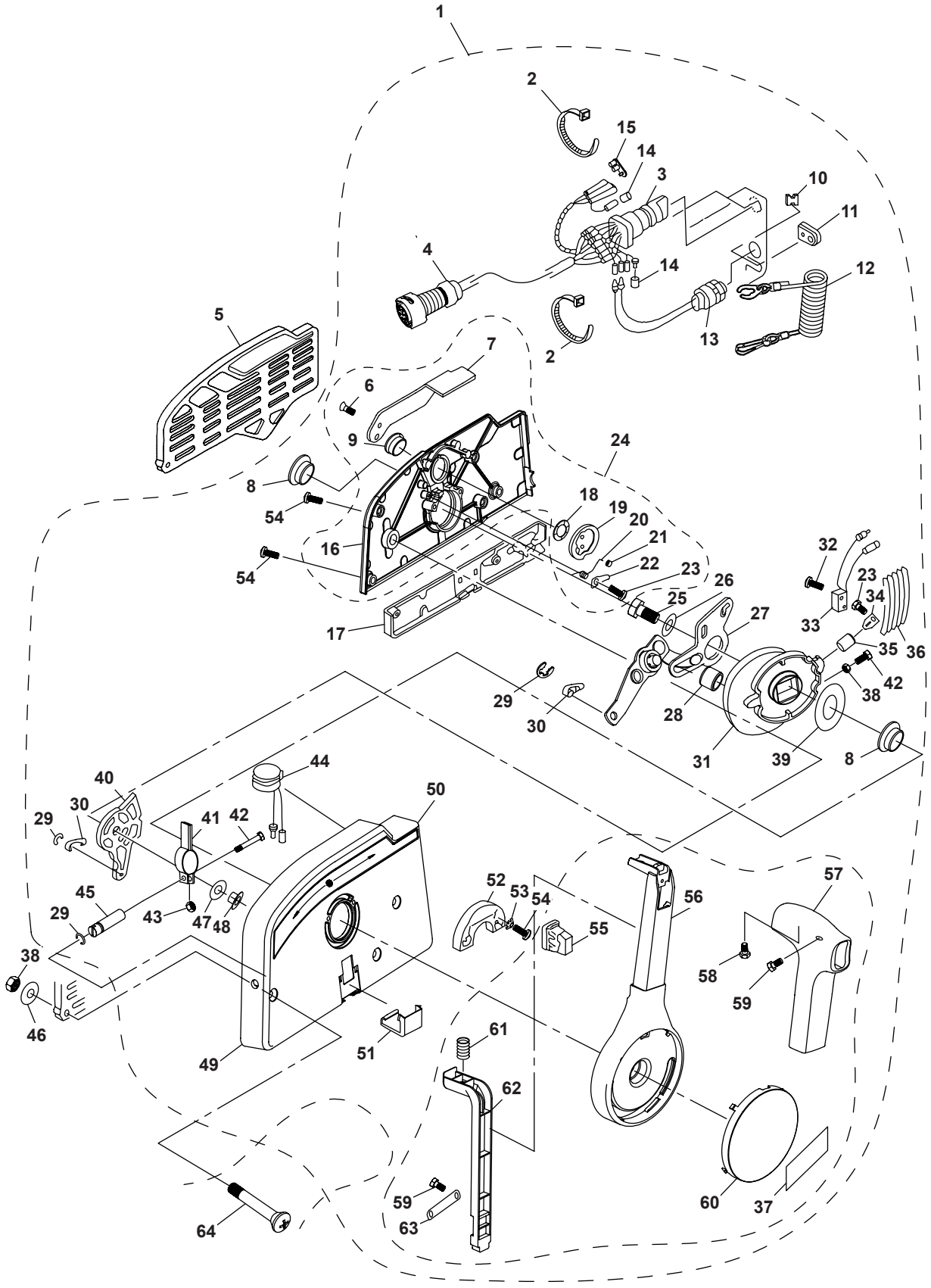

RECAMBIOS MARINOS S.L.

BOAT-parts.se



F40FWL-T

TAPA MOTOR / TOP COWLING ASSY / CALANDRA

Nº	Ref.	Description	Quanty
1	PAF40-06000000	TOP COWLING ASSY	1
2	PAF40-06000003	COVBR,TOP COWLING	1
3	PAF40-08000002	MARK (RIGHT), TOP COWLING	1
4	PAF40-06000001	TOP COWLING	1
5	PAF40-08000004	MARK (FRONT), TOP COWLING	1
6	PAF25-06000006	FLAT BOLT B	2
7	PAF40-06000002	RUBBER SEAL, TOP COWLING	1
8	PAF25-06000004	POTHOOK (FRONT)	1
9	PAGB/T6184-M6	LOCKNUT M6	4
10	PAF25-06000100	POTHOOK ASSY(BACK)	1
11	PAF25-06000005	CUSHION, BACK POTHOOK	1
12	PAGB/T5783-M6x20	BOLT M6x20	4
13	PAGB/T97.1-6	WASHER 6	4
14	PAF40-08000001	MARK (LEFT), TOP COWLING	1
15	PAF40-06000007	FLAT BOLT A	2
16	PAF40-08000003	MARK (BACK), TOP COWLING	1

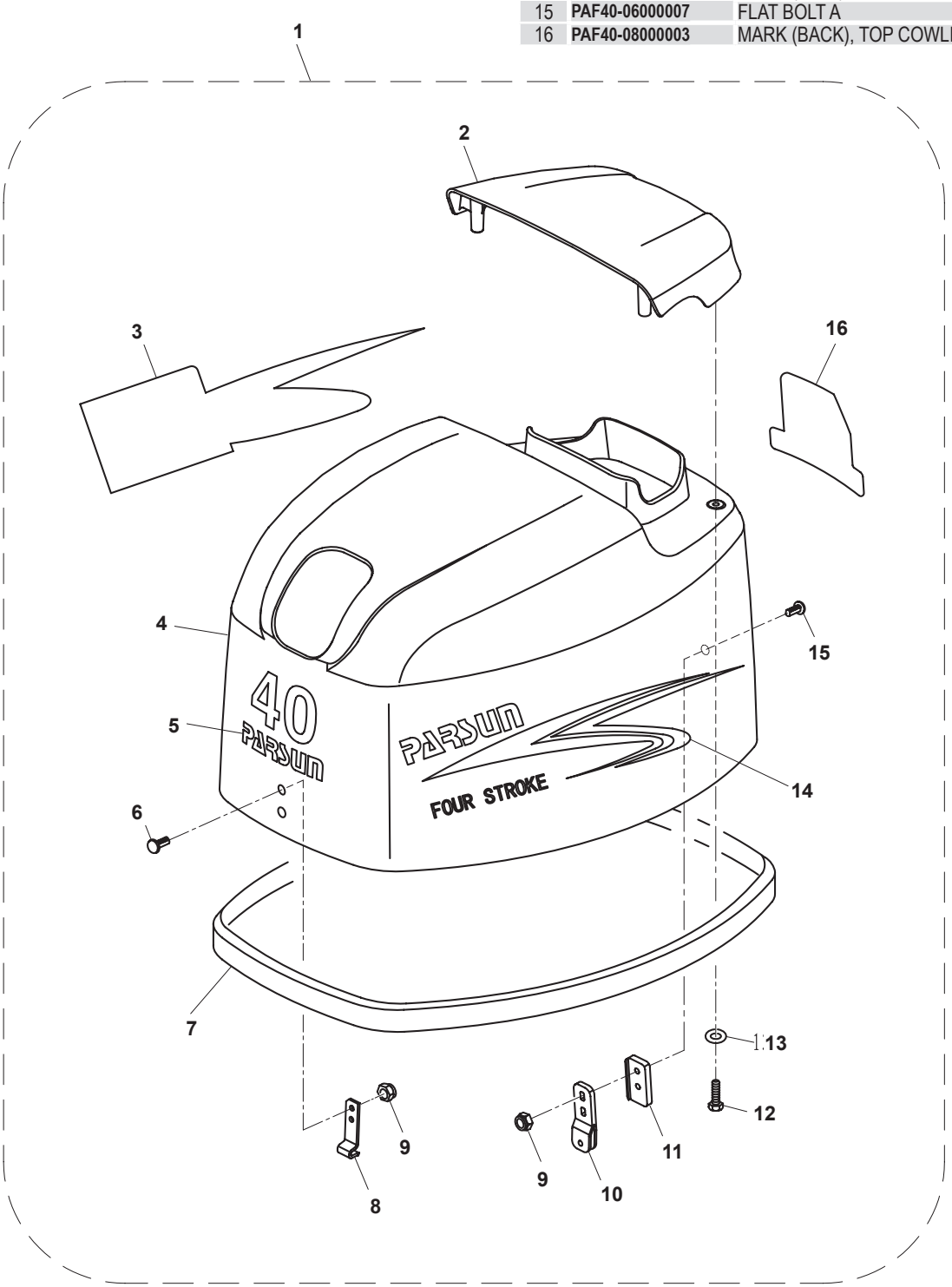

BOAT-parts.se

BANDEJA MOTOR / BOTTON COWLING / BASE CALANDRA

Nº	Ref.	Description	Quanty
1	PAF40-03000001EI	BOTTOM COWLING (EFI)	
2	PAF15-01000015	JACKET, CABLE	1
3	PAF15-05000006	SHEATH, WAVB	1
4	PAF25-03000003	RUBBRR PLUG, CIRCULAR	1
5	PAF40-03000009	RUBBER PLUG, ABNORMAL	1
6	PAF4-05000200	FUEL CONNECTOR ASSY	1
7	PAGB/T6170-M6	NUT M6	3
8	PAF15-05000017	SEAL, RUBBER	1
9	PAGB/T97.1-6	WASHER 6	10
10	PAGB/T5783-M6x25	BOLT M6x25	1
11	PAF40-03000006	COVER BOARD	1
12	PAGB/T5783-M6x30	BOLT M6x30	4
13	PAF15-05000008	CLAMP A	1
14	PAGB/T5783-M6x20	BOLT M6x20	5
15	PAF25-03000023W	BRACKET, JAM	1
16	PAGB/T84.5-ST5.5x19	SCREW ST5.5x19	2
17	PAF25-03000100W	JAM ASSY	1
18	PAF25-03000101W	JAM	1
19	PAF25-03000102W	RUBBBR RING, JAM	1
20	PAF25-03000103W	JOINT, JAM	1
21	PAF25-03000104W	NUT, JAM	1
22	PAGB/T823-M6x10	SCREW M6x10	1

Nº	Ref.	Description	Quanty
23	PAF20-03000101	SEAL, PILOT LAMP	1
24	PAF40-03000300EI	PILOT LAMP ASSY (EFI)	1
25	PAF15-05000003	RUBBER PLUG, QUADRATE	1
26	PAF40-03000012	BRACKET, PILOT LAMP	1
27	PAF15-05000033	JACKET, LEVER	1
28	PAGB/T93-6	SPRING-WASHER 6	4
29	PAF25-00000004	BIG WASHER 6	4
30	PAF25-03000006	DAMPER	4
31	PAF25-03000007	BUSHING, DAMPER	4
32	PAF25-03000019	BRACKET ASSY, TENSIONAL SPRING	1
33	PAF15-05000026	SPRING, TENSION	1
34	PAGB/T5783-M6x12	BOLT M6x12	1
35	PAF25-03020000	LOCKING ASSY, TOP COWLING	1
36	PAF15-05000036	BUSHING B	1
37	PAF15-05000022	BUSHING A	1
38	PAF15-05000023	WASHER, WAVE	1
39	PAF40-03000100	LOCKING ASSY, TOP COWLING	1
40	PAF15-05000009	WATER NIPPLE, PLASTIC	1
41	PAF40-03000011	JAM, BOTTOM COWLING	1
42	PAF25-03000002	SEAL, BOTTOM COWLING	1
43	PAF40-00000100	SHIELD, UPPER CASING	1
44	PAGB/T818-M6X25	SCREW M6X25	2
45	PAF40-0300600W	SWUITCH ASSY, TILT	1
46	PAF40-03000008	JACKET, TILT SWITCH	1
47	PAF40-03000400EI	START SWITCH	
48	PAF40-03000009W	RUBBER PLUG, ABNORMAL	
49	PAF25-03000029W	SEAL, RUBBER	1
50	PAF40-03000014W	WAVE JACKET, WATER PIPE	1
51	PAT36-04000023	CLAMP	1

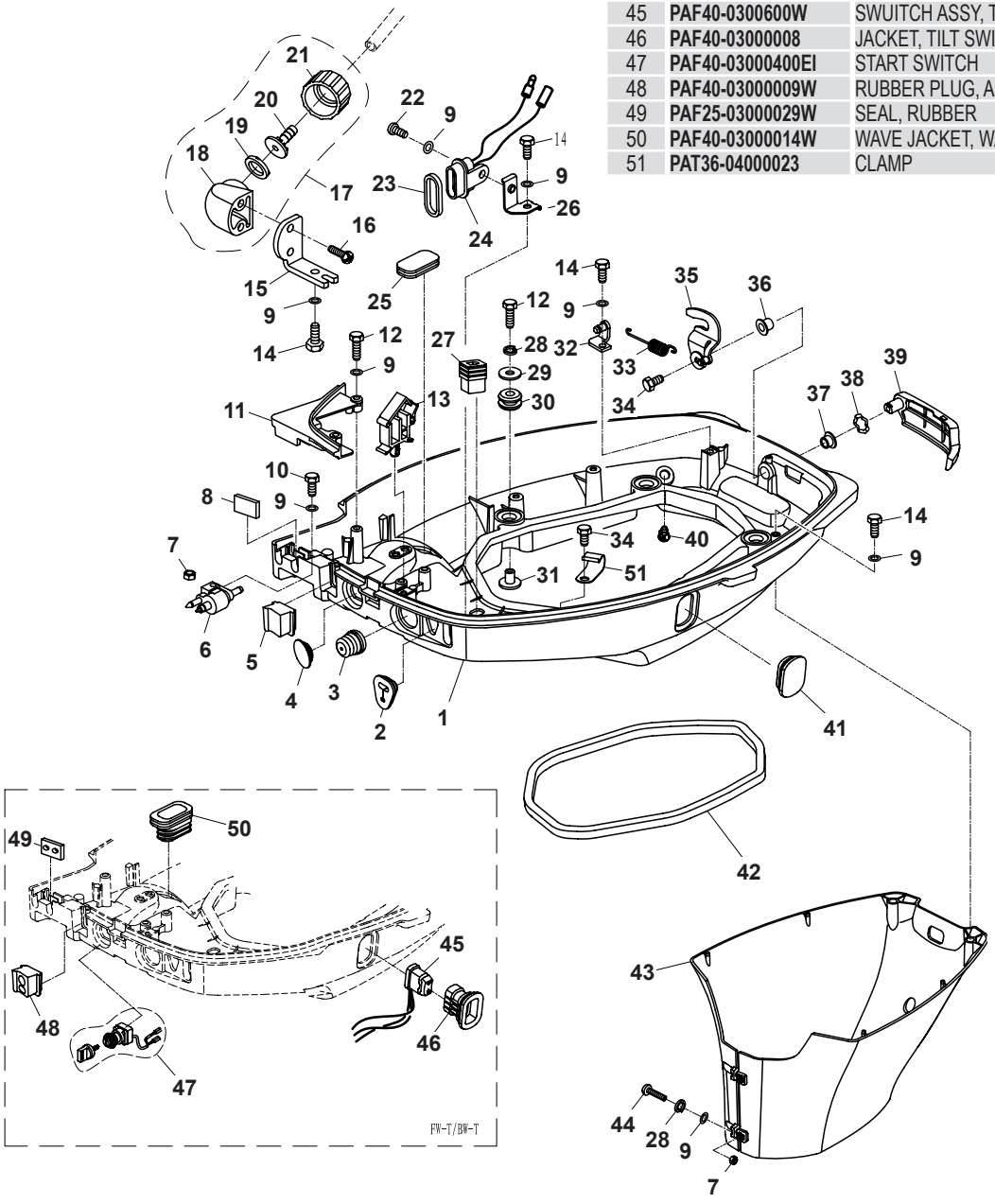

RECAMBIOS MARINOS S.L.

BOAT-parts.se

ARRANQUE / STARTER ASSY / AVVIAMENTO

Nº	Ref.	Description	Quanty
1	PAGB/T5783-M5x12	BOLT M5x12	1
2	PAGB/T96-5	BIG WASHER 5	1
3	PAF40-05080200	TIGHTWIRE ASSY, ARRESTER	1
4	PAF25-05160002	SPRING CLAMP	1
5	PAF40-05080000	STARTER ASSY	1
6	PAF25-05160012	RUBBER JACKET	1
7	PAGB/T5783-M6x25	BOLT M6x25	4
8	PAGB/T97.1-6	WASHER 6	6
9	PAF4-04130102	COVER, HANDLE	1
10	PAF25-05160019	START LINE	1
11	PAF25-05160501	STARTER HANDLE	1
12	PAF25-05160021	DAMPER, HANDLE	1
13	PAF40-05080001	SEAL, FROTHY RUBBER	1
14	PAF40-05080100	STARTER CASING ASSY	1
15	PAT40-05110002	CHAIN WHEEL,STARTER	1
16	PAT40-05110003	BUSHING, CHAIN WHEEL	1
17	PAGB/T96-6	BIG WASHER 6	1
18	PAGB/T93-6	SPRING-WASHER	1
19	PAGB/T5783-M6x30	BOLT M6x30	1
20	PAF25-05160014	SEAT,VOLUTE SPRING	1
21	PAF25-05160015	VOLUTE SPRING	1
22	PAF25-05160001	BRAKE	1
23	PAF25-05160005	SPRING, PAWL	1
24	PAF25-05160003	TWIST SPRING, BRAKE	1

Nº	Ref.	Description	Quanty
25	PAF25-05160004	PAWL, BRAKE	1
26	PAF25-05160006	FIXED PLATE, BRAKE	1
27	PAGB/T848-5	SMALL WASHER 5	3
28	PAGB/T5783-M5x30	BOLT M5x30	3
29	PAF25-05160300	WHEEL ASSY, START-UP	1
30	PAF25-05160304	WRIST SPRING, PAWL	2
31	PAF25-05160305	PAWL, START-UP	2
32	PAGB/T896-6	COTTER CIRCLIP 6	2
33	PAF25-05160016	SPRING, PLATE	1
34	PAF25-05160017	PLATE, START-UP	1
35	PAF25-05160018	BOLT, PLATE	1
36	PAGB/T5783-M6x12	BOLT M6x12	1
37	PAF40-05000035	FIXED PLATE,TIGHTWIRE	1
38	PAF15-00000012	SPRING CLAMP Ø1.8	1
39	PAGB/T5783-M6x16	BOLT M6x16	1

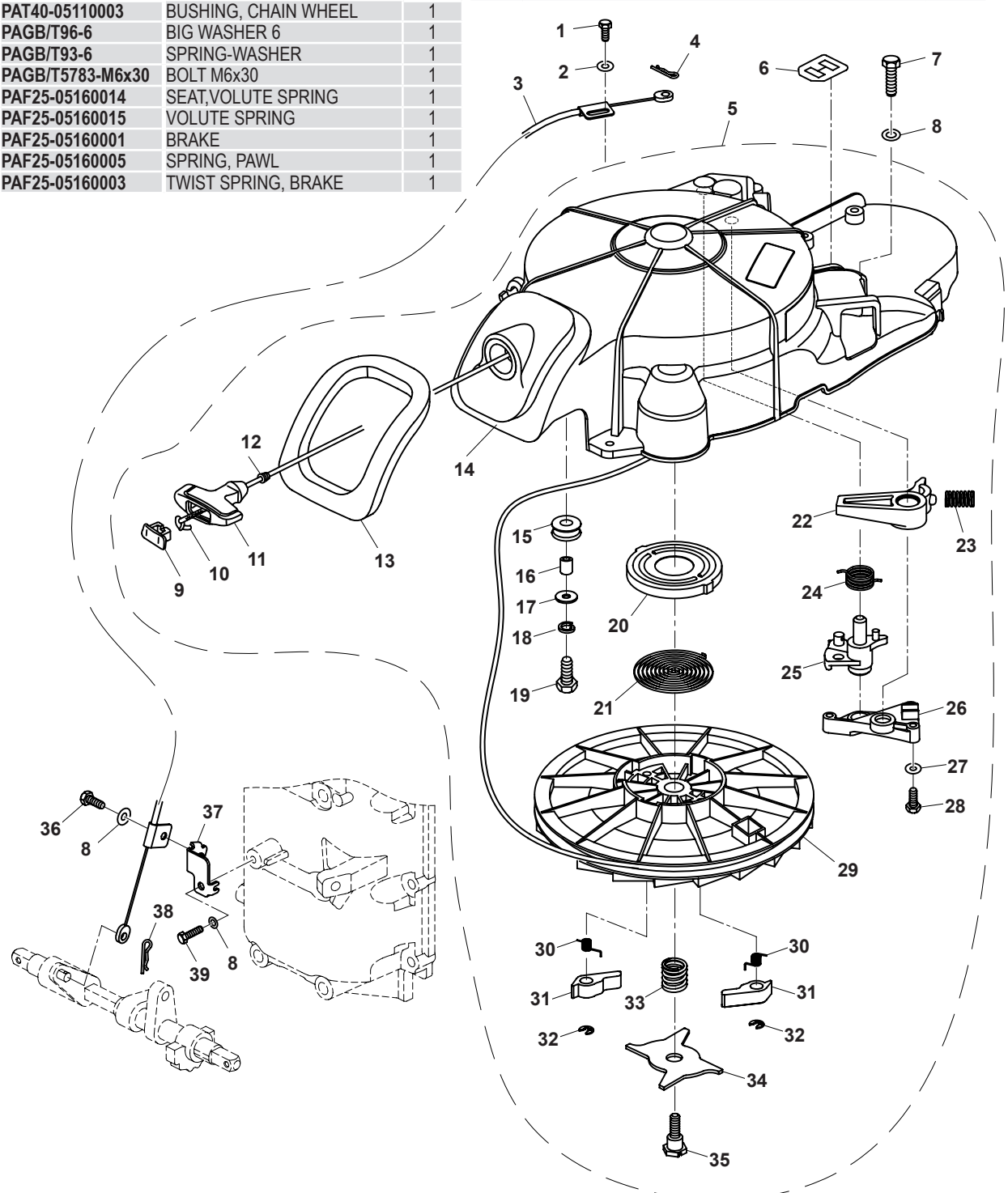

BOAT-parts.se

CAMBIO 1 / CONTROL SYSTEM 1 / CALANDRA 1

Nº	Ref.	Description	Quanty
1	PAF40-05000028	CONNECTING ROD, ACCELEROGRAPH	1
2	PAF15-07000016	JOINT, CONNECTING ROD	1
3	PAGB/T5782-M6x55	BOLT M6x55	1
4	PAGB/T96-6	BIG WASHER 6	1
5	PAF15-07000014	DRIVEN WHEEL, ACCELEROGRAPH	1
6	PAF40-05000016	BUSHING, ACCELEROGRAPH	1
7	PAF40-05000033	CHAIN WHEEL, ACCELEROGRAPH	1
8	PAGB/T5783-M6x10	BOLT M6x10	1
9	PAF40-05000015	PLATE, STEEL CABLE	1
10	PAGB/T5783-M6x25	BOLT M6x25	4
11	PAGB/T97.1-6	WASHER 6	7
12	PAF15-05040002	BEARER, SHIFT ROD	2
13	PAF40-03000010	ROCKER, DETENT	1

Nº	Ref.	Description	Quanty
14	PAGB/T879.4-Ø3x20	PIN Ø 3x20	1
15	PAF15-05040100	LEVER ASSY, SHIFT ROD	1
16	PAGB/T5783-M6x20	BOLT M6x20	1
17	PAF15-05000031	SPRING PIECE, SHIFT ROD	1
18	PAF15-05000032	SPRING PIECE, SHIFT ROD	1
19	PAF15-00000012	CLIP Ø1.8	1
20	PAF40-03000007L	CONNECTING ROD, SHIFT GEAR	1
21	PAGB/T818-M3x14	SCREW M3x14	2
22	PAF15-13000800W	JIGGLE SWITCH	1
23	PAF15-05000300BW	PLATE, JIGGLE SWITCH	1
24	PAGB/T6170-M3	NUT M3	2
25	PAGB/T5783-M6x16	BOLT M6x16	2
26	PAF25-03030005W	ROCKER C, ARRESTER	1
27	PAGB/T879.2-3x20	COLUMNIFORM PIN Ø 3 x 20	1

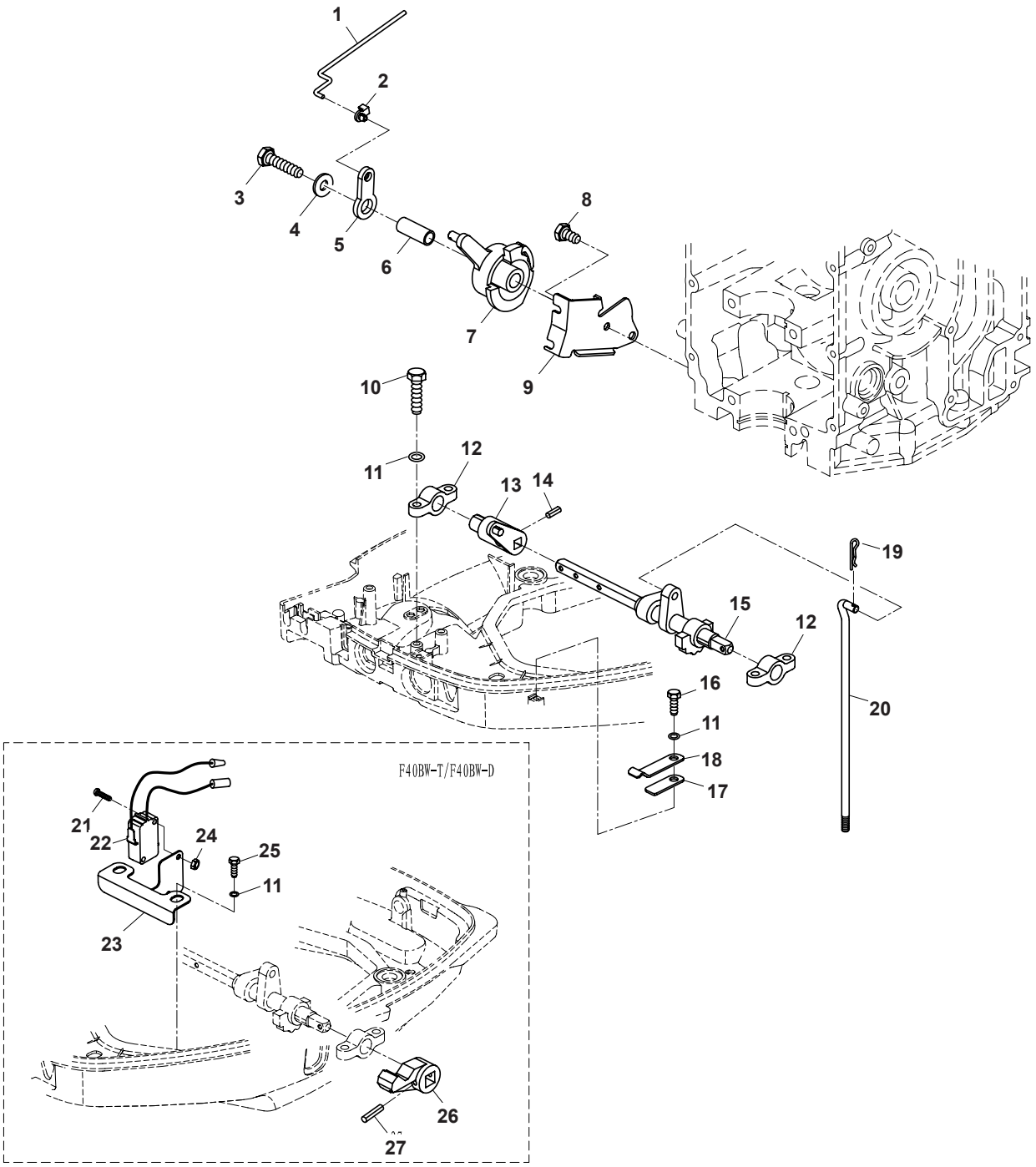

RECAMBIOS MARINOS S.L.

BOAT-parts.se

CAMBIO 2 / CONTROL SYSTEM 2 / CALANDRA 2

Nº	Ref.	Description	Quanty	Nº	Ref.	Description	Quanty
1	**PAF40-05000016W**	TIE-IN, CONTROL CABLE	1	14	**PAF25-03030003W**	ROCKER B, STOPPER	1
2	**PAF25-07000005W**	TIE-IN, CONTROL CABLE	1	15	**PAGB/T879. 2-3x20**	COLUMNIFORM PIN Ø3x20	1
3	**PAF25-07000200W**	CONTROL CABLE ASSY	2	16	**PAF25-07000006W**	THIN LOCKNUT	2
4	**PAF25-07000003W**	PLATE, RINGENT	1	17	**PAGB/T97.1-10**	WASHER 10	5
5	**PAGB/T96-5**	BIG WASHER 5	2	18	**PAF25-01000007W**	PLATE	1
6	**PAF15-00000012**	CLIP SPRING Ø1.8	3	19	**PAGB/T889.2-M10x1.25**	THIN LOCKNUT M10x1.25	2
7	**PAGB/T5783-M6x25**	BOLT M6x25	1	20	**PAJASO F404 24-016**	0-RING	1
8	**PAGB/T5287-6**	SUPPER WASHER 6	1	21	**PAF25-01010012W**	NUT, PLASTIC	1
9	**PAF25-03000027W**	PLATE, SHIFT	1	22	**PAF25-07000301W**	LINK ROD, TURNING	1
10	**PAF25-03000028W**	BUSH, LIMITED PLATE	1	23	**PAF25-07000304W**	NUT 3/8'	1
11	**PAF25-05160002**	CLIP SPRING Ø1	1	24	**PAF25-07000303W**	TUBE, BOLT	1
12	**PAF25-03030004W**	LINK ROD B, SHIFT	1	25	**PAF25-07000302W**	BOLT	1
13	**PAF40-05000015W**	PLATE, STEEL CABLE	1	26	**PAF25-07000300W**	LINK ROD ASSY	1

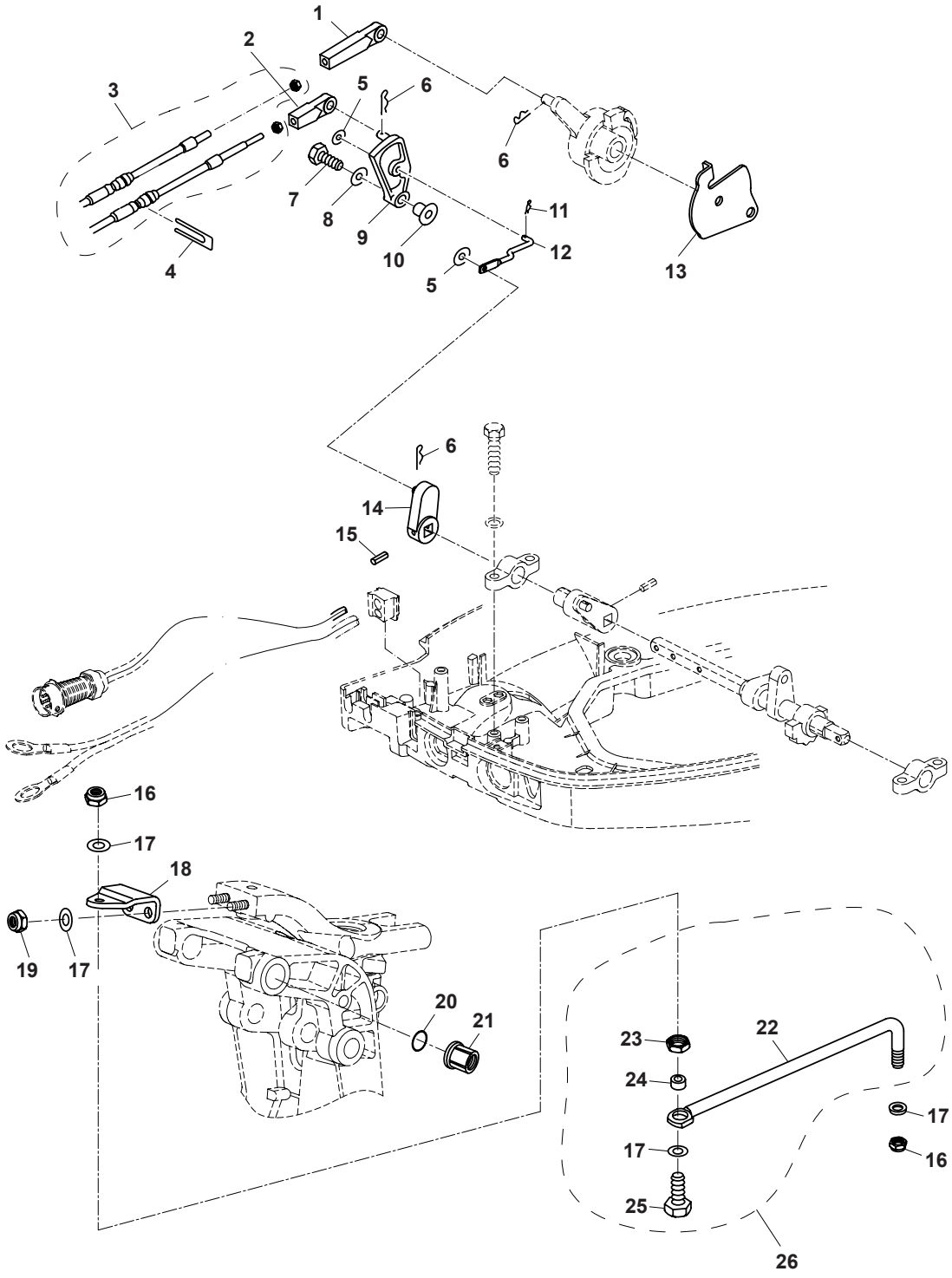

BOAT-parts.se

BLOQUE / CRANKCASE / BLOCCO

Nº	Ref.	Description	Quanty
1	**PAGB/T5783-M8x35**	BOLT M8x35	1
2	**PAGB/T97.1-8**	WASHER 8	9
3	**PAF40-05000011**	POTHOOK, ENGINE	1
4	**PAF40-05010000**	CRANKCASE ASSY	1
5	**PAF15-07010004**	JAM 1/8"	4
6	**PAF25-00000014**	DOWEL PIN Ø8x12	2
7	**PAF25-05010104**	JAM 1/2"	1
8	**PAF25-05010103**	JAM 3/4"	1
9	**PAF25-05000035**	BOLT M8x80	8
10	**PAF15-07000030**	BOLT M6x35	8
11	**PAGB/T97.1-6**	WASHER 6	18
12	**PAF40-00000003**	GASKET, ENGINE	1
13	**PAF25-05000100**	OIL FILTER	1
14	**PAF15-07010003**	STUD SCREW M20x1.5x35	1
15	**PAF40-05000004**	GASKET, EXHAUST COVER	1
16	**PAF40-05000005EI**	COVER, EXHAUST (EFI)	
17	**PAGB/T5783-M6x35**	BOLT M6x35	10

Nº	Ref.	Description	Quanty
18	**PAF40-05000038**	GASKET, JAM	1
19	**PAF40-05000037**	JAM M18x1.5	1
20	**PAF25-05010113**	JOINT,WATER NIPPLE	1
21	**PAF15-07010021**	COVER, THERMOSTAT	1
22	**PAF15-07000031**	THERMOSTAT (S60)	1
23	**PAF15-07010022**	GASKET, THERMOSTAT	1
24	**PAF40-05000003**	CLAMP	1
25	**PAF40-05000022**	WATER PIPE A Ø6 x Ø11 x 280	1
26	**PAF40-05000053**	WATER PIPE B Ø6 x Ø11 x 330	1
27	**PAF40-03000016**	THREE WAY	2
28	**PAF40-03000004**	WATER PIPE F	1
29	**PAF40-03000002**	WATER PIPE C Ø6 x Ø11 x 170	1
30	**PAF40-03000003**	WATER PIPE D Ø6 x Ø11 x 230	1

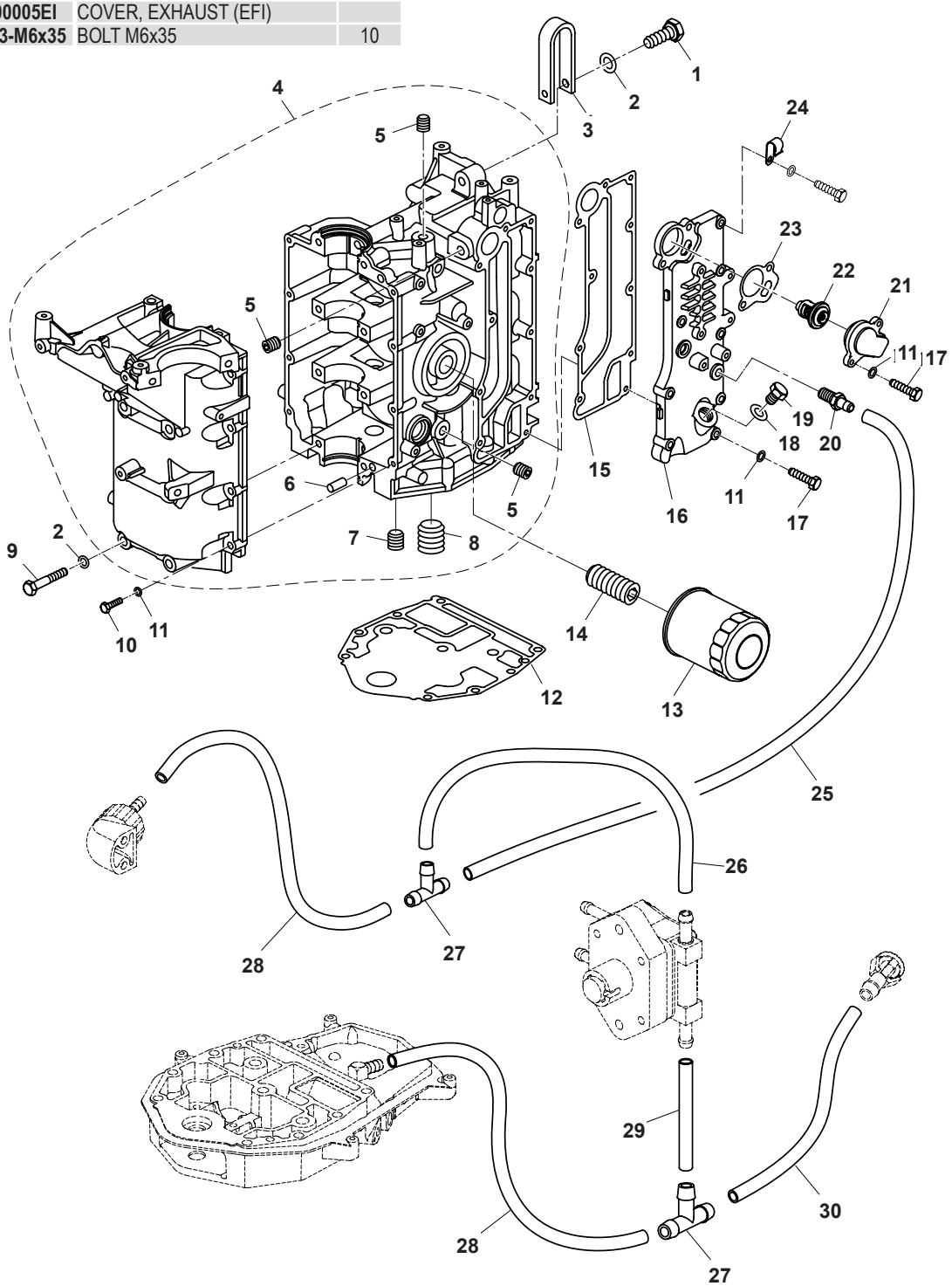

BOAT-parts.se

RECAMBIOS MARINOS S.L.

CULATA / CYLINDER HEAD / TESTATA

Nº	Ref.	Description	Quanty
1	**PAF15-07050004**	FILLER CAP, ENGINE OIL	1
2	**PAJASO F404 35 025**	O-RING	1
3	**PAF40-05070000**	COVER ASSY, CYLINDER HEAD	1
4	**PAF40-05070001**	COVER, CYLINDER HEAD	1
5	**PAF40-05070002**	CONNECTOR, BREATHER	1
6	**PAF25-02010003**	CONNECTOR B, GAS PIPE	1
7	**PAF40-05070004**	SIEVE NET	1
8	**PAF40-05070003**	PLATE, BREATHER	1
9	**PAF40-05000002**	SEAL, CYLINDER HEAD	1
10	**PAGB/T818-M4x1O**	SCREW M4x10	4
11	**PAGB/T5783-M6x20**	BOLT M6x20	7
12	**PAGB/T97.1-6**	WASHER 6	11
13	**PAF25-05050021**	OIL SEAL, CAMSHAFT	1

Nº	Ref.	Description	Quanty
14	**PAF15-07010005**	PLUG 1/4"	5
15	**PAF25-05050007**	WASHER, LIMITING BOLT	4
16	**PAF25-05050006**	LIMITING BOLT, CAMSHAFT	1
17	**PAF25-05000003**	WASHER 9	8
18	**PAF25-05000002**	BOLT M9x1.25	8
19	**PAF40-05040100EI**	CYLINDER HEAD ASSY (EFI)	
20	**PAF15-07040104**	GUIDE,V ALVE	6
21	**PAF20-05000037**	SPARK PLUG DPR7EA-9	3
22	**PAF8-05000022**	BOLT M6x25	4
23	**PAF25-00000014**	DOWEL PIN 8x12	2
24	**PAF40-05030000**	GASKET ASSY, CYLINDER HEAD	1
25	**PAGB/T5783-M6x10**	BOLT M6x10	3

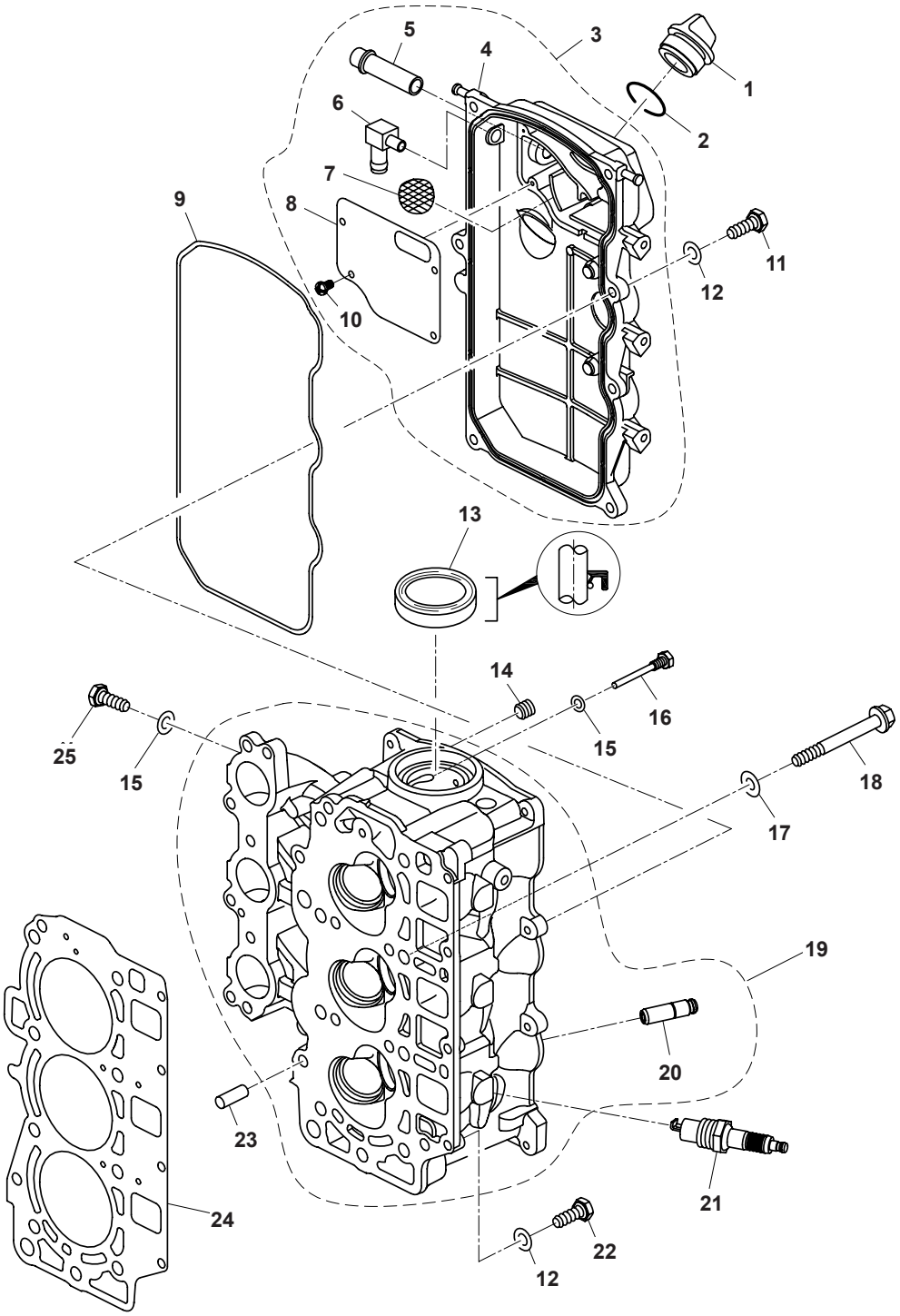

BOAT-parts.se

CIGÜEÑAL Y PISTONES / CRANKSHAFT & PISTON
ALBERO MOTORE E PISITONE

Nº	Ref.	Description	Quanty
1	PAF25-05020003	OIL SEAL B	1
2	PAF40-05000001	CRANKSHAFT	1
3	PAF25-05010302-1	BEARING SHELL, CRANKSHAFT (BLACK)	8
3	PAF25-05010302-2	BEARING SHELL, CRANKSHAFT (BROWN)	
4	PAF25-05020002	OIL SEAL A	1
5	PAF25-05020200	CONNECTING ROD ASSY	3
6	PAF25-05020204	BOLT, CONNECTING ROD	6
7	PAF25-05020203-1	BEARING SHELL, CONNECTING ROD (BLACK)	6
7	PAF25-05020203-2	BEARING SHELL, CONNECTING ROD (BROWN)	
8	PAF25-05020106	CIRCLIP, PISTON PIN	6
9	PAF25-05020105	PIN, PISTON	3
10	PAF40-05020100	PISTON ASSY	3
11	PAF40-05020101	PISTON	3
12	PAF25-05020102	PISTON RING ASSY	3

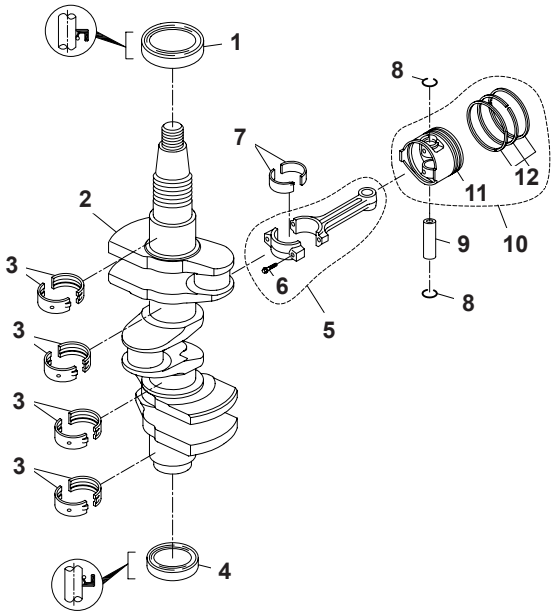

VÁLVULA / VALVE / VALVOLA

Nº	Ref.	Description	Quanty
1	PAF25-05050002	VALVE, EXHAUST	3
2	PAF25-05050003	WASHER, VALVE SPRING	6
3	PS2700.04.03	SEAL, VALVE STEM	6
4	PAF25-05050005	SPRING, VALVE	6
5	PAF15-07040006	RETAINER, VALVE SPRING	6
6	PAF15-07040007	COTTER, VALVE SPRING	12
7	PAF25-05050300	ROCKER ASSY	6
8	PAF25-05050301	ROCKER	6
9	PAF15-07040303	SCREW, VALVE ADJUSTING	6
10	PAF15-07040304	LOCK NUT	6
11	PAF25-05050001	VALVE, INTAKE	3
12	PAF40-05040001	SHAFT, ROCKER	1
13	PAF40-05040002	SUPPORTING PLATE, SPRING PLATE	2
14	PAF40-05040004	SPRING PLATE A, ROCKER	1
15	PAF25-05050012	SPRING PLATE B, ROCKER	2
16	PAF25-05050019	FLANGE BOLT, ROCKER SHAFT	4
17	PAF40-05040003	FIXED PLATE B, ROCKER SHAFT	1
18	PAF25-05050011	SPRING PLATE, ROCKER	1
19	PAF25-05050009	FIXED PLATE A, ROCKER SHAFT	1

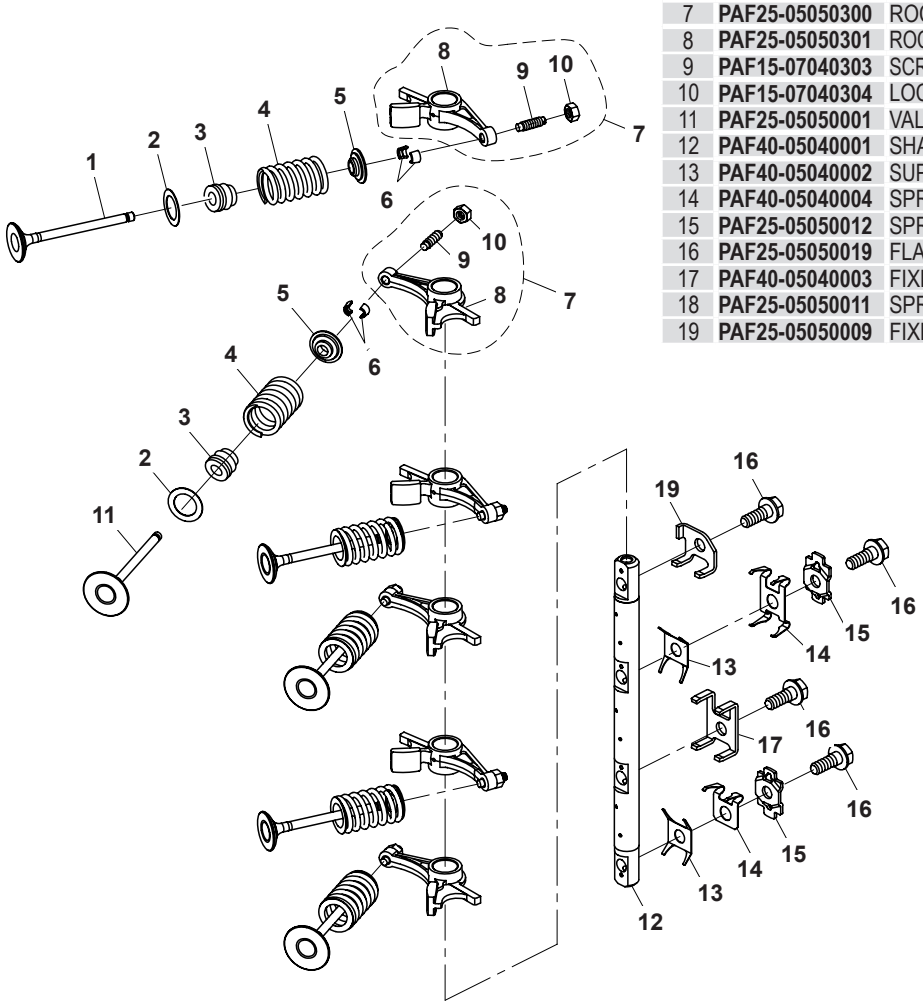

BOAT-parts.se

RECAMBIOS MARINOS S.L.

BOMBA COMBUSTIBLE / FUEL SYSTEM / POMPA BENZINA

Nº	Ref.	Description	Quanty
1	**PAGB/T5783-M6x14**	BOLT M6x14	1
2	**PAGB/T93-6**	SPRING-WASHER 6	1
3	**PAGB/T6170-M8**	NUT M8	1
4	**PAF40-05000036**	BRACKET, FILTER CUP	1
5	**PAT85-05000300**	FILTBR CUP ASSY	1
6	**PAF15-07080001**	ELEMENT, FILTER	1
7	**PAT85-05000302**	FLOATER	1
8	**PAGB/T3452.1Ø32.5xI.8**	SEAL, FILTER CUP	1
9	**PAT85-05000301**	CUP, FILTER	1
10	**PAF4-04000030**	SPRING, FUEL PIPE B	6
11	**PAF40-03000005EI**	FUBL PIPE A Ø5 x 10 x 720 (EFI)	1
12	**PAF40-05000021EI**	FUEL PIPE (EFFI)	1
13	**PAF40-05000019**	FUEL PIPE B Ø5 x 10 x 400	1
14	**PAGB/T3452.1-25x3.0**	O-RING 25x3.O	1
15	**PAGB/T5783-M6x30**	BOLT M6x30	2
16	**PAGB/T97.1-6**	WASHER 6	2
17	**PAF40-05050000**	FUEL PUMP ASSY	1

Nº	Ref.	Description	Quanty
18	**PAF25-05130004**	PLUNGER	1
19	**PAF25-05130003**	SPRING, PLUNGER	1
20	**PAF25-05130001**	SEAT, FUEL PUMP	1
21	**PAGB/T6170-M5**	NUT M5	4
22	**PAF25-05130002**	SPRING, DIAPHRAGM	1
23	**PAF25-05130008**	ROLLER NEEDLE Ø4x16.5	1
24	**PAF25-05130100**	DIAPHRAGM SHAFT ASSY	1
25	**PAF4-04090011**	SCREW M3x6	2
26	**PAF4-04090005**	UNILATERAL PLATE	2
27	**PAF40-05050200**	FUEL PUMP SHELL ASSY	1
28	**PAF25-05130005**	UPPER DIAPHRAGM	1
29	**PAF25-05130006**	SEAL, FUEL PUMP	1
30	**PAF25-05130007**	COVER, FUEL PUMP	1
31	**PAGB/T818-M5x40**	SCREW, PAN HEAD M5x40	4

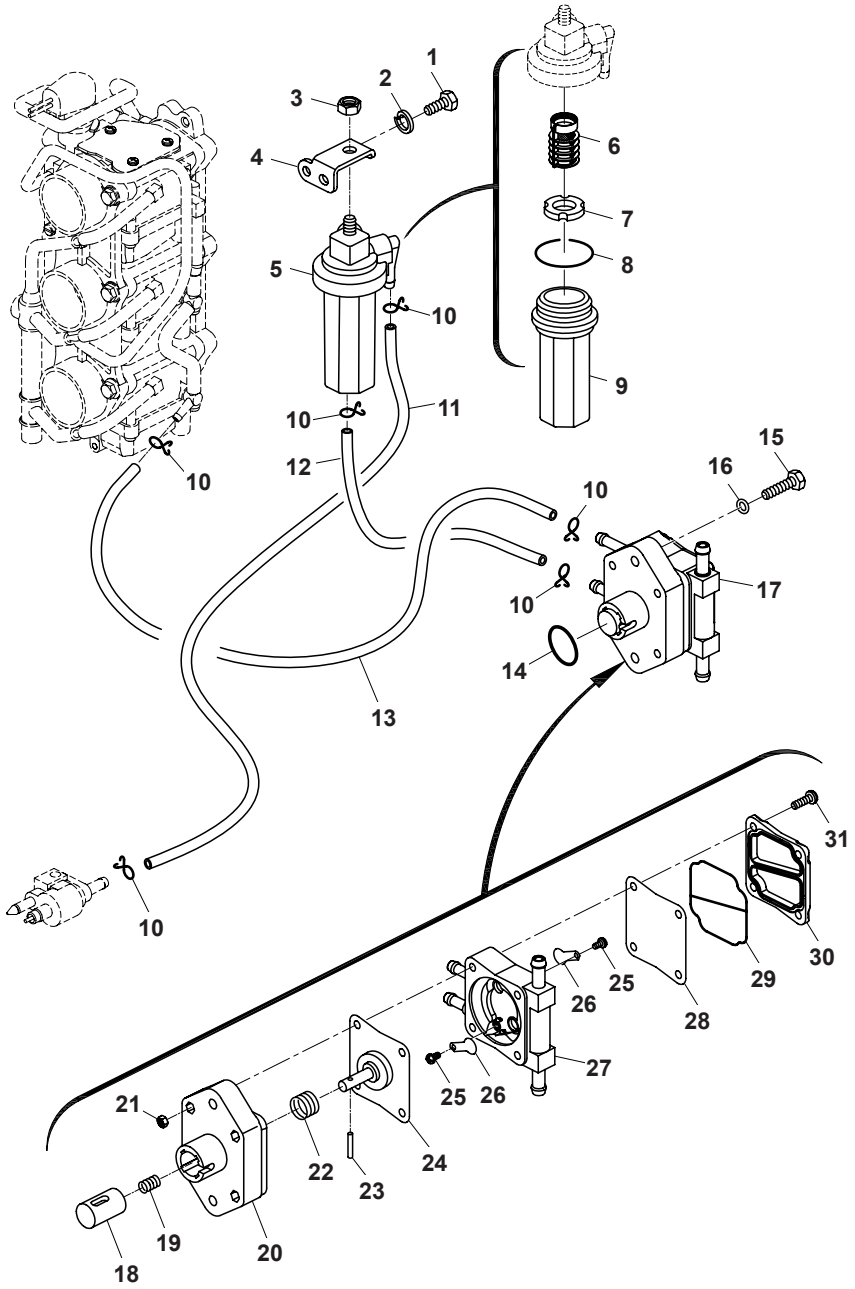

BOAT-parts.se

ADMISIÓN / INTAKE / ASPIRAZIONE

Nº	Ref.	Description	Quanty
1	PAF40-05000025	FLANGE BUSHING B	1
2	PAGB/T96-6	BIG WASHER 6	1
3	PAGB/T5783-M6x20	BOLT M6x20	1
4	PAF40-05000024	INTAKE SILENCER	1
5	PAF40-05000026	RUBBER JACKET, SHAPED PIPE	1
6	PAF40-05000027	SHAPED PIPE, FABRIC	1
7	PAHT4.5x200	CLAMP 4.5 x 200	6
8	PAF40-05000023	RUBBER JACKET, INTAKB SILENCER	3
9	PAGB/T3452.1-34.4x1.8	O-RING 34.4 x I.8	6
10	PAF40-05000013	PADDING BLOCK, CARBURETOR	1
11	PAF40-05000014	DOWEL PIN 8 x 15.8	2
12	PAGB/T5783-M6x25	BOLT M6 x 25	6
13	PAGB/T97.1-6	WASHER 6	6

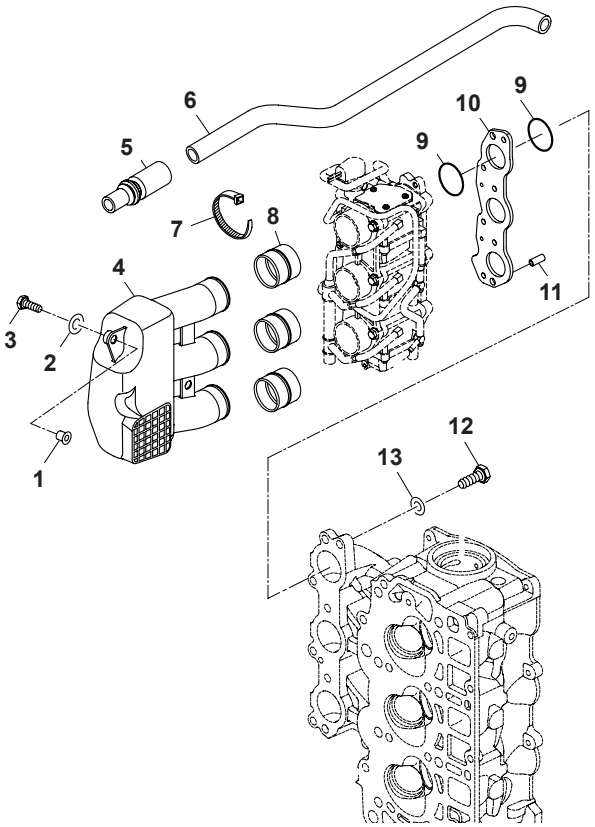

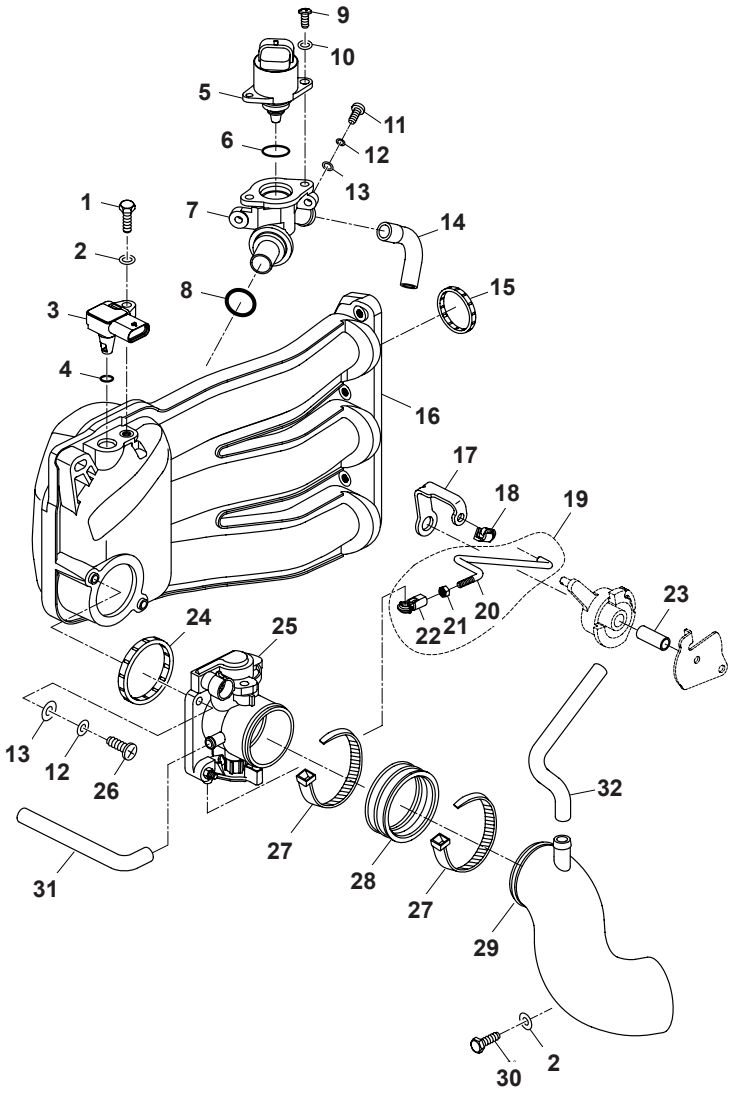

Nº	Ref.	Description	Quanty
1	PAGB/T5783-M6x20	BOLT M6x20	1
2	PAGB/T97.1-6	WASHER 6	3
3	PAF40-05090600EI	SENSOR, INTAKE TEMPERATURE	1
4	PAF40-05090601EI	0-RING,TEMP. SENSOR	1
5	PAF40-05090503EI	STEP MOTOR	1
6	PAF40-05090503-1EI	O-RING, STEP MOTOR	1
7	PAF40-05090501EI	IDLE CONTROL	1
8	PAF40-05090602EI	O-RING, IDLE CONTROL	1
9	PAGB/T818-M4x10	BOLT M4x10	2
10	PAGB/T97.1-4	WASHER 4	2
11	PAGB/T818-M5x14	BOLT M5x14	2
12	PAGB/T93-5	SPRING WASHER 5	4
13	PAGB/T97.1-5	WASHER 5	4
14	PAF40-05000026EI	IDLE CONTROL PIPE	1
15	PAF40-05090803EI	SEAL, INTAKE SILENCER	3
16	PAF40-05090800EI	INTAKE SILENCER ASSY	1
17	PAF40-05000039EI	SWING ROD, THROTTLE ACTUATOR	1
18	PAF15-07130314W	JOIN, CHOKE	1
19	PAF40-05000900EI	LINK ROD ASSY, ACCELERATOR	1
20	PAF40-05000901EI	LINK ROD, ACCELERATOR	1
21	PAGB/T6170-M5	NUT M5	1
22	PAT20-06050302	JOIN B, LINK ROD	1
23	PAF40-05000016EI	BUSHING, ACCELEROGRAPH	1
24	PAF40-05090403EI	SEAL,THROTTLE VALVE	1
25	PAF40-05090400EI	THROTTLE VALVE ASSY	1
26	PAGB/T818-M5x20	BOLT M5x20	2
27	PAHT4.0x300	CLAMP 4.0x300	2
28	PAF40-05090408EI	RUBBER BOOT, THROTTLE VALVE	1
29	PAF40-05000064EI	CONDUIT, THROTTLE VALVE	1
30	PAGB/T5783-M6x14	BOLT M6x14	1
31	PAF40-05000050EI	AIR PIPE A	1
32	PAF40-05000048EI	AIR PIPE	1

RECAMBIOS MARINOS S.L.

BOAT-parts.se

CARBURADOR / CARBURETOR ASSY / CARBURATORE

Nº	Ref.	Description	Quanty
1	**PAF40-05060000**	CARBURETOR ASSY	1
2	**PAF40-05061000**	CARBURETOR A	1
3	**PAGB/T818-M4x8**	SCREW M4x8	1
4	**PAGB/T93-4**	SPRING-WASHER 4	1
5	**PAF40-05061402**	ENRCHING VALVE PLATE	1
6	**PAF40-05061400**	ENRCHING VALVE ASSY	1
7	**PAF40-05061401**	ENRCHING VALVE O-RING	1
8	**PAGB/T818-M4x10**	SCREW M4x10	9
9	**PAGB/T93-4**	SPRING-WASHER 4	9
10	**PAF40-05061001**	PLATE	3
11	**PAF40-05061002**	PLATE HERMETIC MAT	3
12	**PAF40-05061019**	SPRING, AIR ADJUSTING	3
13	**PAF40-05061020**	SCREW, AIR ADJUSTING O-RING	3
14	**PAF40-05061021**	SCREW, AIR ADJUSTING	3
15	**PAF40-05061006**	SPRING, SWING LINK	3
16	**PAF40-05061005**	ENRCHING VALVE TUBE	3
17	**PAF40-05061004**	ENRCHING VALVE FINGER	3
18	**PAF40-05061003**	ENRCHING VALVE SPRING	3
19	**PAF40-05061007**	APRON, ACCELERATOR	3
20	**PAGB/T93-3**	SPRING-WASHER 3	6
21	**PAGB/T818-M3x6**	SCREW M3x6	6
23	**PAF40-05061203**	BOLT SPRING, THROTTEL	
24	**PAGB/T818-M4x10**	SCREW M4x10	3
25	**PAF40-05061200**	CONNECTING ROD, ACCELERATOR	1
26	**PAF40-05060004**	WASHER NYLON	3
27	**PAGB/T97.1-4**	WASHER 4	3
28	**PAGB/T91-1.2x10**	PIN, COTTER 1.2x10	3
29	**PAF40-05061100**	CARBURETOR BODY	1
30	**PAF40-05061008**	WASHER OSCILLATING BAR	3
31	**PAGB/T896-6**	CIRCLIP 6	3
32	**PAF40-05061015**	MIAN NOZZLE	3
33	**PAF40-05061016**	MAIN JET	3
34	**PAF40-05061017**	JET, AIR ADJUSTING	3
35	**PAF40-05061018**	RUBBER CAP	3
36	**PAF40-05061011**	NEDDLE VALVE	3
37	**PAF40-05061012**	SPRING, NEDDLE VALVE	3
38	**PAF40-05061013**	FLOAT	3
39	**PAF40-05061014**	PIN, FLOAT	3
40	**PAGB/T818-M4x8**	SCREW M4x8	3
41	**PAF40-05061014**	SEAL, OIL CUP	3
42	**PAGB/T818-M2X3**	SCREW M2x3	3
43	**PAF40-05061009**	ENRCHING VALVE EJECTOR ROB	3
44	**PAF40-05061010**	ENRCHING VALVE MOREEN	3
45	**PAF40-05061303**	ENRCHING VALVE PLENGER	3
46	**PAF40-05061304**	ENRCHING VALVE SPRING	3
47	**PAF40-05061306**	GASKET, DRAIN SCREW	3
48	**PAF40-05061305**	DRAIN SCREW	3
49	**PAF40-05061300**	OIL CUP	3
50	**PAGB/T93-4**	SPRING-WASHER	12
51	**PAGB/T818-M4x14**	SCREW M4x14	12
52	**PAGB/T3452.1-34.4X1.8**	O-RING 34.4x1.8	9
53	**PAF40-05060001**	CARBURETOR ABUTMENT	1
54	**PAF40-05060014**	PIPING OIL B	1
55	**PAF40-0506200**	CARBURETOR B	1
56	**PAF40-05060013**	PIPING OIL A	1
57	**PAF40-05063200**	ACCELERATOR BAR ASSY C	1
58	**PAF40-05063000**	CARBURETOR C	1
59	**PAGB/T97.1-6**	WASHER 6	6
60	**PAGB/T5782-M6X90**	BOLT M6x90	6
61	**PAF40-05060002**	CARBURETOR INSPIRATION SOCKET	1
62	**PAF40-05060007**	INSPIRATION OIL	1
63	**PAF40-05060011**	INSPIRATION JOINT A	2
64	**PAF40-05060012**	INSPIRATION JOINT B	1
65	**PAF40-05060008**	INSPIRATION OIL A	3
66	**PAF40-05060009**	INSPIRATION OIL B	1
67	**PAF40-05060006**	FUEL LINE B	2
68	**PAF40-05060005**	FUEL LINE A	1
69	**PAF40-05060010**	OIL PLASTIC NIP	1

BOAT-parts.se

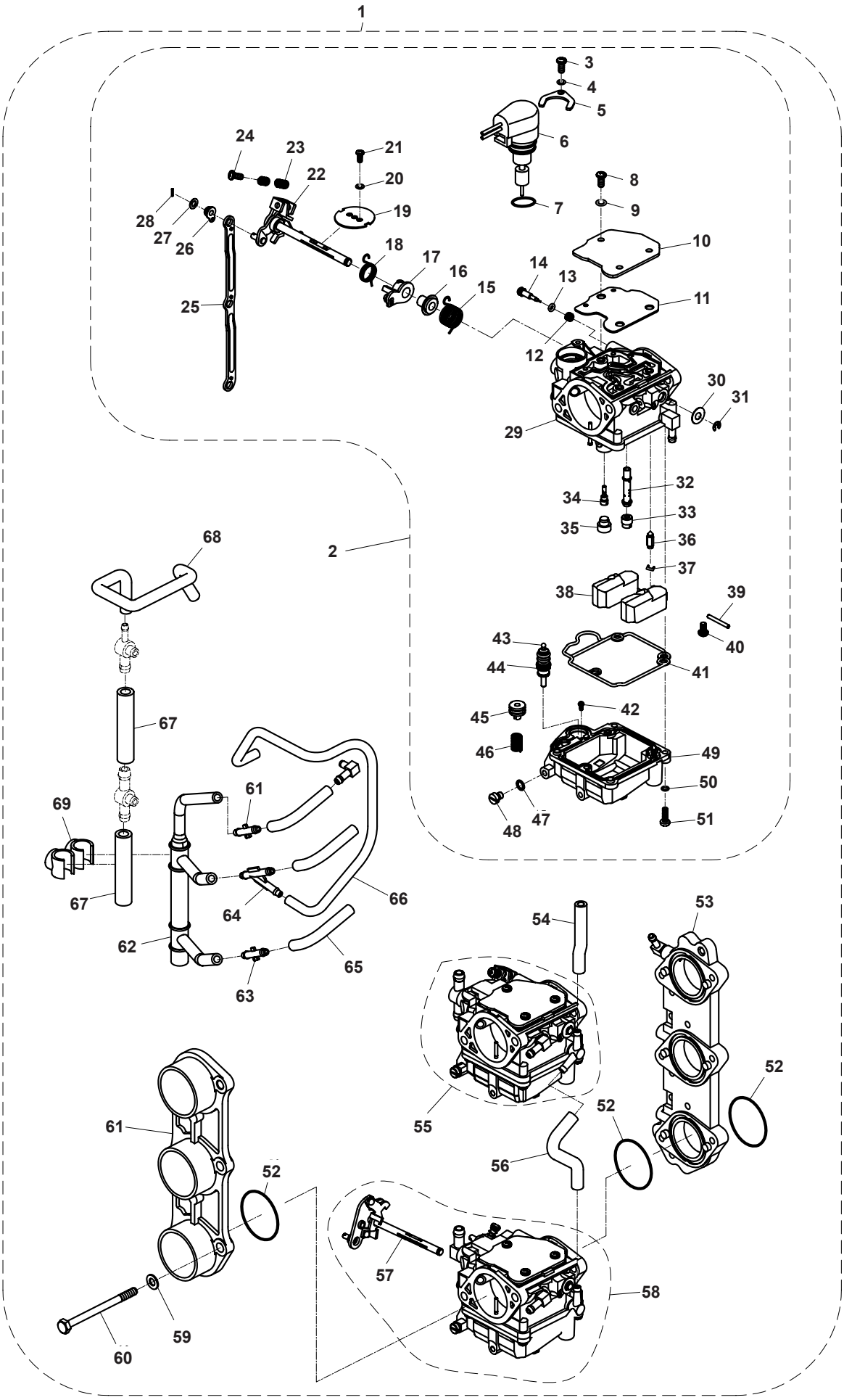

BOAT-parts.se

RECAMBIOS MARINOS S.L.

ELECTRICIDAD 1 / ELECTRICAL 1 / PARTE ELETTRICA 1

Nº	Ref.	Description	Quanty
1	PAF25-05000026	FLYWHEEL NUT	1
2	PAF25-05000025	WASHER, FLYWHEEL NUT	1
3	PAGB/T70.1-M8x12	BOLT M8x12	3
4	PAF40-05000010	PULLBY, STARTER	1
5	PAF40-05000700	FLYWHEEL	1
5	PAF40-05000700BI	FLYWHEEL (EFI)	
6	PAGB/T5783-M6x30	BOLT M6x30	7
7	PAF40-05000600EI	MAGNETO COIL ASSY (EFI)	
8	PAGB/T97.1-6	WASHER 6	4
9	PAF40-05000034	BRACKET,COIL	1
10	PAF8-00000005	DOWEL PIN 8x10	2
11	PAF25-05000024	WOODRUFF KEY, FLYWHEEL	1
12	PAGB/T5783-M5x16	BOLT M5x16	2
13	PAGB/T97.1-5	WASHER 5	2
14	PAF40-05000300	PULSER COIL ASSY	1
15	PAT85-05040004	PLATE B,PULSER COIL (EFI)	1

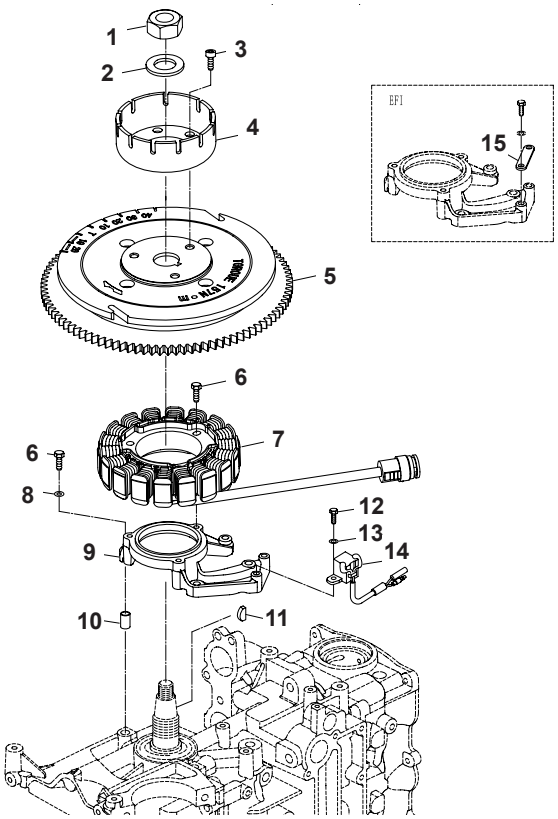

Nº	Ref.	Description	Quanty
1	PAF40-05000029	IGNITION COLL BRACKET A	1
2	PAF40-05000200	IGNITION COLL ASSY	3
3	PAGB/T97.1-6	WASHER 6	6
4	PAGB/T5783-M6x25	BOLT M6x25	6
5	PAF40-05000030	IGNITION COLL BRACKET B	2
6	PAGB/T3452.1-Ø8xØ1.9	O-RING Ø8xØ1.9	1
7	PAF40-05000400	THERMOSTAT ASSY	1
8	PAF40-05000042EI	OIL PRESSURE SENSER	1
9	PAF25-05090005	BUSH, IGNITION UNIT	3
10	PAF25-05090004	BUSH, DAMPING	3
11	PAF40-05000009	BRACKET, IGNITION UNIT	1
12	PAGB/T96-6	BIG WASHER 6	3
13	PAF40-05000100	C.D.I. UNIT ASSY	1
14	PAT36-04000023	LINE CLAMP	2
15	PAGB/T5783-M6x40	BOLT M6x40	3
16	PAF40-05000101	C.D.I. LINE ASSY	1

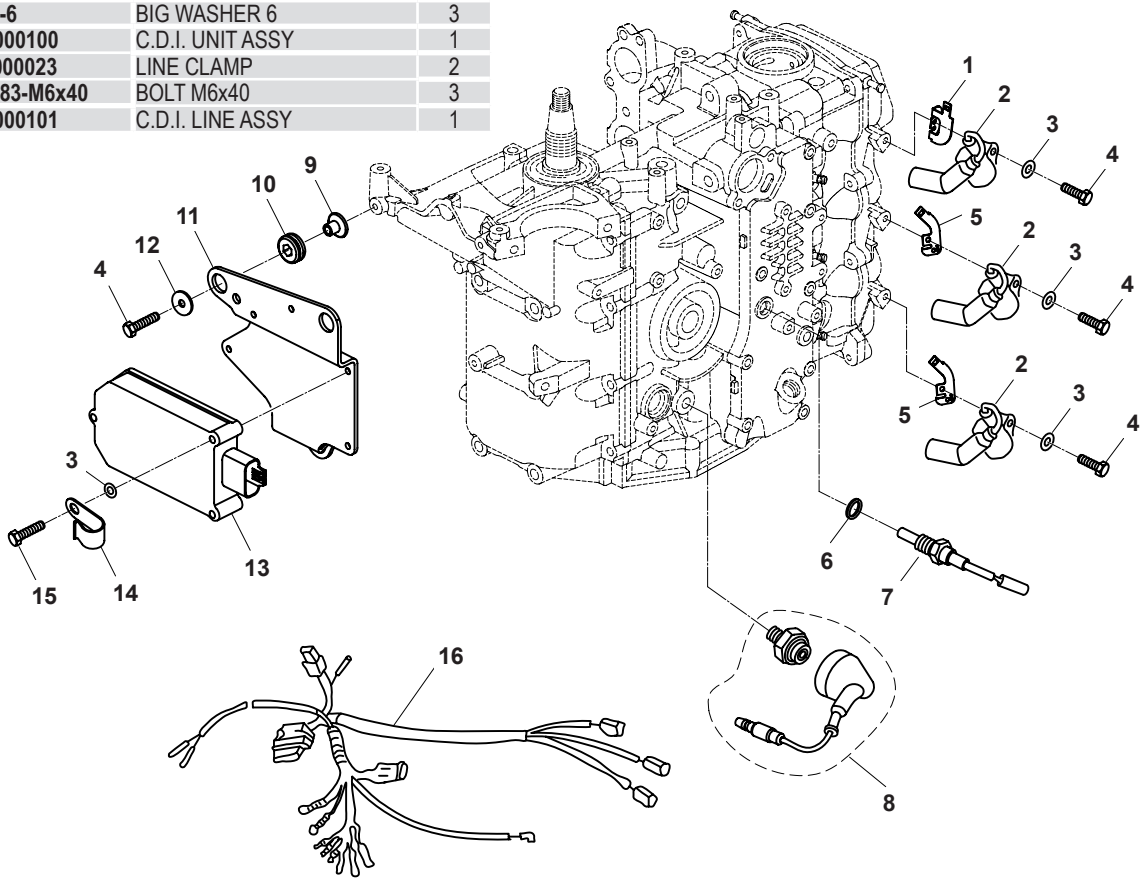

BOAT-parts.se

ELECTRICIDAD 2 / ELECTRICAL 2 / PARTE ELETTRICA 2

Nº	Ref.	Description	Quanty
1	**PAF40-05000500EI**	RECTIFIER ASSY (EFI)	
2	**PAGB/T97.1-6**	WASHER 6	9
3	**PAGB/T5783-M6x30**	BOLT M6x30	2
4	**PAF15-07150001W**	FUSE WIRE (20A)	1
5	**PAF25-05090100W**	FUSE ASSY	1
6	**PAGB/T5783-M6x16**	BOLT M6x16	2
7	**PAF25-07150302W**	BRACKET, RELAY	1
8	**PAF15-07150301W**	JACKET, RELAY	1
9	**PAF15-07150300W**	RELAY, MOTOR	1
10	**PAGB/T97.1-6**	WASHER 6 (COPPER) (HSn62-1)	6
11	**PAGB/T6170-M6**	NUT M6 (COPPER) (HSn62-1)	5
12	**PAF25-05170201W**	JACKET A	2
13	**PAT85-05000022**	CONNECTION LINE, MOTOR	1
14	**PAGB/T5783-M6x12**	BOLT M6x12	2
15	**PAF40-05030005**	RELAY LINE	1
16	**PAF40-05000046**	RELAY BRACKET	1
17	**PAF25-05000037**	BRACKET BUSH	2
18	**PAT85-05030200**	RELAY	1
19	**PA85-05030002**	RELAY LINE (RED)	1

Nº	Ref.	Description	Quanty
20	**PAF25-05170202W**	JACKET, CONNECT LINE	5
21	**PAGB/T5783-M6x35**	BOLT M6x35	2
22	**PAF20-05000903W**	BUSH	2
23	**PAF20-05000902W**	DAMPER, BUSH	2
24	**PAGB/T96-6**	WASHER 6	2
25	**PAGB/T5783-M6x20**	BOLT M6x20	2
26	**PAGB/T97.1-8**	WASHER 8	5
27	**PAF25-05170001W**	FIXATION BOLT, MOTOR	1
28	**PAF25-05170101W**	JACKET	1
29	**PAGB/T6171I-M8**	NUT M8	1
30	**PAT85-05000023**	CONNECTION LINE, POWER	1
31	**PAGB/T5783-M8x50**	BOLT M8x50	1
32	**PAF40-05000800**	STARTING MOTOR	1
33	**PAF25-05170002W**	COLUMNAR BOLT M8	1
34	**PAF40-05030500EI**	C.D.I CABLE ASSY (EFI)	

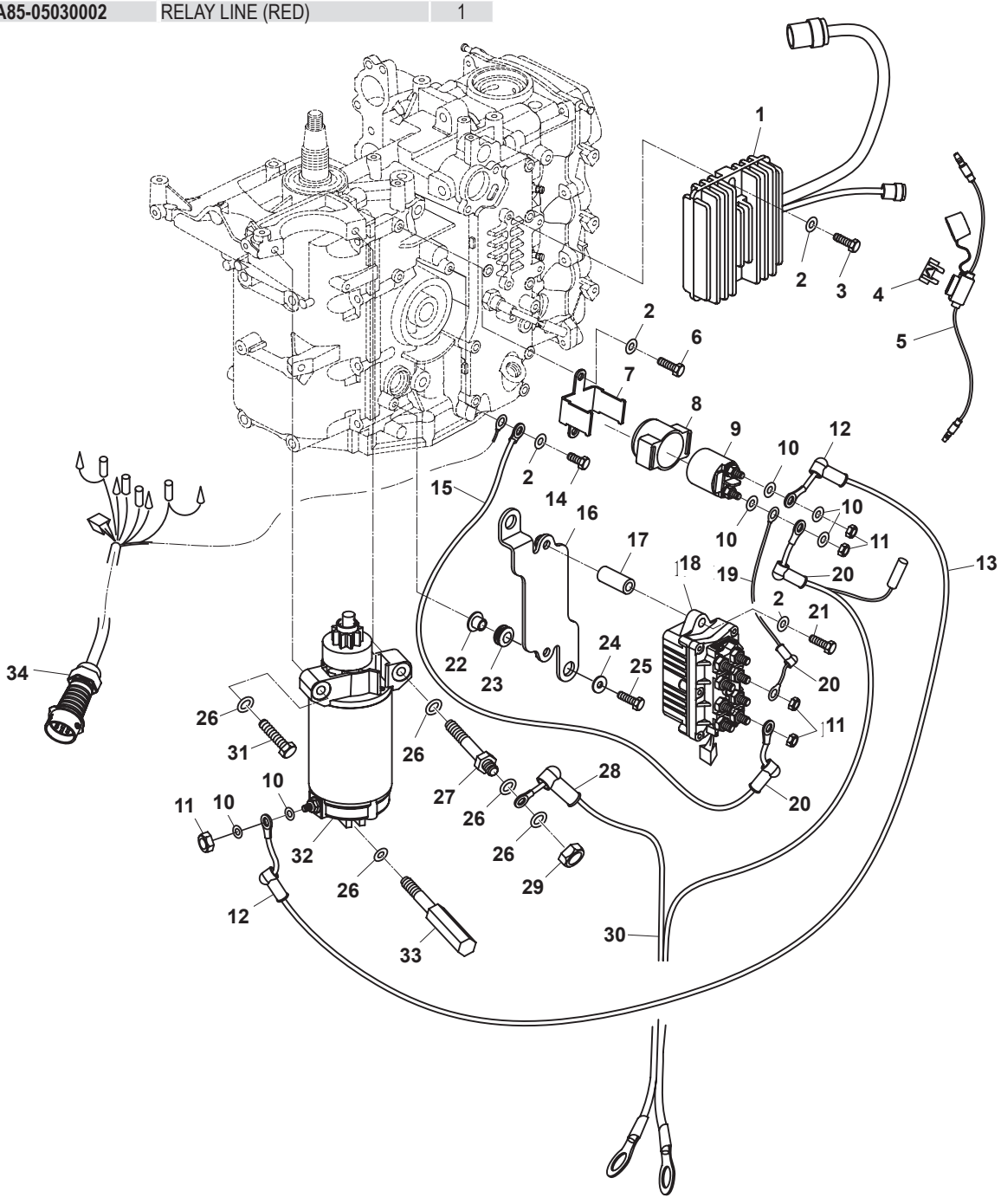

RECAMBIOS MARINOS S.L.
BOAT-parts.se

ELECTRICIDAD 3 / ELECTRICAL 3 / PARTE ELETTRICA 3

Nº	Ref.	Description	Quanty
1	PAGB/T5783-M6x25	BOLT M6x25	6
2	PAGB/T97.1-6	WASHER 6	13
3	PAF40-05091401EI	BRACKET, MAIN RELAY	2
4	PAF40-05091402EI	DAMPER, MAIN RELAY	2
5	PAT40-05000028	TUBE, IGNITER	2
6	PAF40-05000060BI	FIXED PLATE, MAIN RELAY	1
7	PAGB/T6170-M6	NUT M6	2
8	PAGB/T5783-M6x35	BOLT M6x35	2
9	PAF40-05000063EI	PLATE, SENSOR	1
10	PAGB/T5783-M5x16	BOLT M5x16	2
11	PAGB/T97.1-5	WASHER 5	2
12	PAF40-05091600EI	SENSOR, CRANKSHAFT POSITION	1
13	PAGB/T5783-M6x10	BOLT M6x10	1
14	PAF40-05000059EI	CLAMP C	1
15	PAF40-05090200EI	IGNITION COIL ASSY	3
16	PAF8-05000021	WASHER	3
17	PAGB/T5783-M6x40	BOLT M6x40	3
18	PAGB/T5783-M6x16	BOLT M6x16	5
19	PAF40-05000003	CLAMP	1
20	PAF40-05000055EI	BRACKET, RELAY	1
21	PAF40-05090700EI	SENSOR, WATER TEMPERATURE	1
22	PAF15-07000021	BUSHING, INTAKE SILENCER	1

Nº	Ref.	Description	Quanty
23	PAF8-05000007	DAMPER	3
24	PAF40-05000009-2EI	BRACKET, FIXED PLATE	1
25	PAGB/T5783-M6x20	BOLT M6x20	5
26	PAF40-05000009-1EI	FIXED PLATE, ECU	1
27	PAF40-05000065EI	CLAMP D	4
28	PAF8-05000006	BUSHING	4
29	PAGB/T5783-M6x12	BOLT M6x12	2
30	PAF40-05000049EI	FIXED PLATE, MAGNETIC VALVE	1
31	PAF40-05091500EI	MAGNETIC VALVE, CARBON POT	1
32	PAF40-05090100EI	ECU	1
33	PAF40-05001000EI	C.D.I LINE ASSY	1
34	PAF40-05001000-1EI	FUSE WIRE (40A)	1
34	PAF40-05001000-2EI	FUSE WIRE (20A)	1
34	PAF40-05001000-3EI	FUSB WIRE (ISA)	1
34	PAF40-05001000-4EI	FUSE WIRE (7.5A)	1
35	PAF40-05091400EI	MAIN RELAY	2
36	PAF40-05001200EI	CONNECTION LINE,TILT	1
37	PAT85-05030200	RELAY ASSY	1
38	PAF40-03000013EI	FIXED BRACKET, TILT RELAY	1

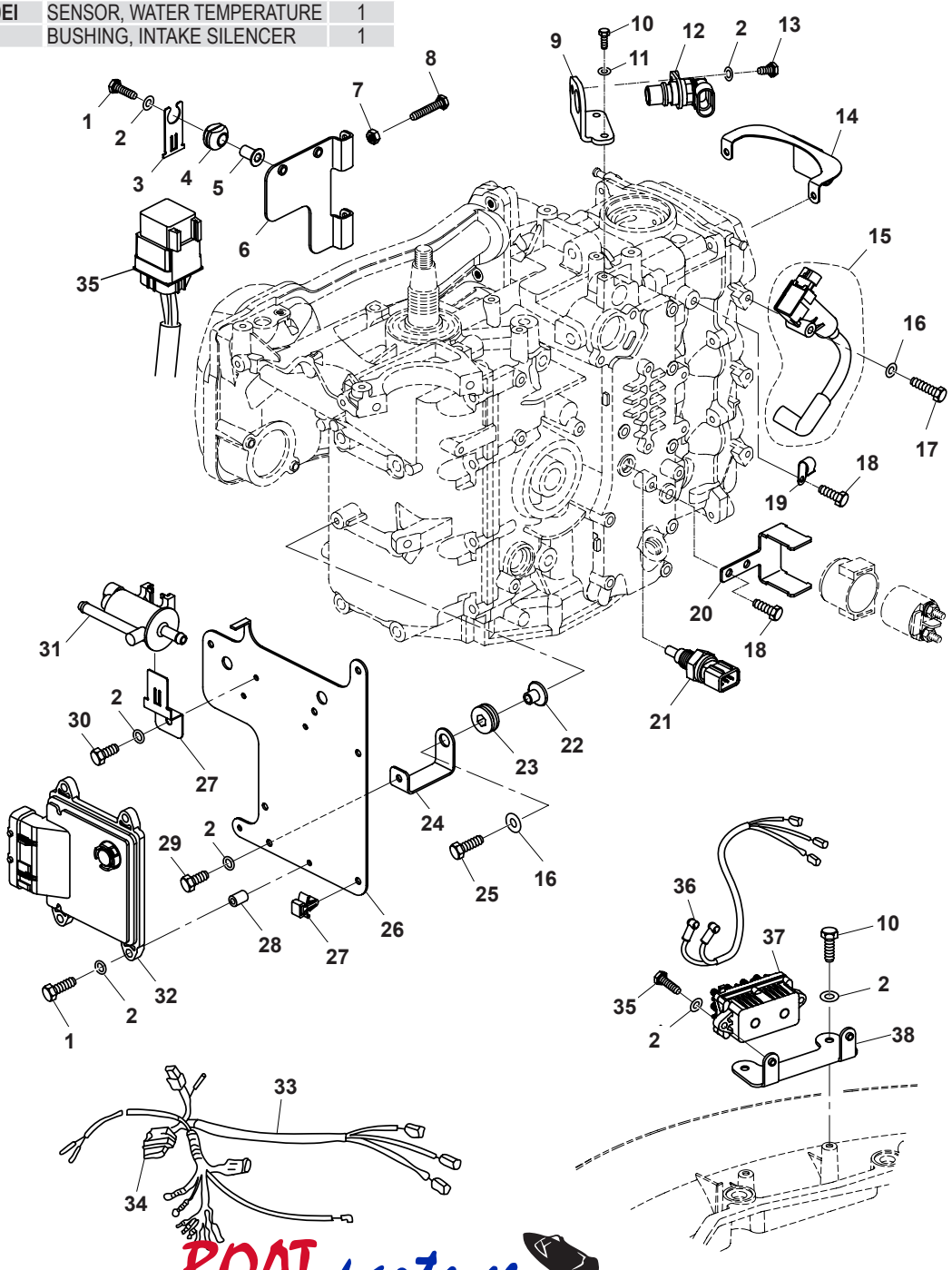

BOAT-parts.se

DIRECCIÓN / STEERING / STERZO

Nº	Ref.	Description	Quanty
1	PAF40-01030101	THROTTLE CABLE ASSY	1
2	PAGB/T889.2-M10x1.25	LOCKNUT M10x1.25	3
3	PAGB/T6170-M10x1.25	NUT M10x1.25	1
4	PAF15-01000013	ORIENTATION PLATE, HANDLE	1
5	PAF15-01000011	BUSHING, HANDLE (LOW)	1
6	PAGB/T5782-M6x45	BOLT M6x45	1
7	PAGB/T97.1-6	WASHER 6	3
8	PAT40-00000006	BLOCK, HANDLE	1
9	PAT40-00000005	WAVE WASHER	1
10	PAT40-00000004	WASHER, HANDLE	1
11	PAT40-00000002	HANDLE, GEAR SHIFT	1
12	PAF40-00000001	CONNECTING ROD, GEAR SHIFT	1
13	PAF15-00000012	CLIP	1
14	PAT40-00000003	FLANGE TUBE	1
15	PAT40-01020001	JACKET, HANDLE BRACKET	1
16	PAF25-01030001	BRACKET, HANDLE	1
17	PAGB/T97.1-10	WASHER 10	2
18	PAGB/T6170-M6	NUT M6	1
19	PAF15-01000012	NYLON WASHER, BUSHING	1

Nº	Ref.	Description	Quanty
20	PAF15-01000008	WASHER, BUSHING	2
21	PAF15-01000009	WAVE WASHER, BUSHING	2
22	PAF15-01000007	BUSHING, HANDLE (HIGH)	1
23	PAF15-01030003	BOLT, DOUBLE HEAD	1
24	PAF15-01030001	HANDLE, STEERING	1
25	PAGB/T91-Ø1.6x12	COTTER PIN Ø1.6x12	1
26	PAF15-01030200	BOLT, FRICTION ADJUSTING	1
27	PAF4-01090006	BUSH	1
28	PAF4-01090007	SPRING, COMPRESSION	1
29	PAGB/T818-10	SMALL WASHER 10	1
30	PAF4-01090300	STEERING HANDLE ASSY	1
31	PAT15-01020003	ENGINE STOP SWITCH ASSY	1
	PAF40-01020003BI	ENGINE STOP SWITCH ASSY	
32	PAF4-01090401	STOPER, HANG ROPE ASSY	1
33	PAGB/T820-M5x25	SCREW, PAN HEAD M5x25	1
34	PAF4-01090003	FRICTION	1
35	PAF4-01090004	NYLON WASHER	1
36	PAF15-01030100	THROTTLE LEVER ASSY	1
37	PAGB/T5783-M6x20	BOLT M6x20	2
38	PAF15-01030005	PLATE,THROTTLE LEVER	1

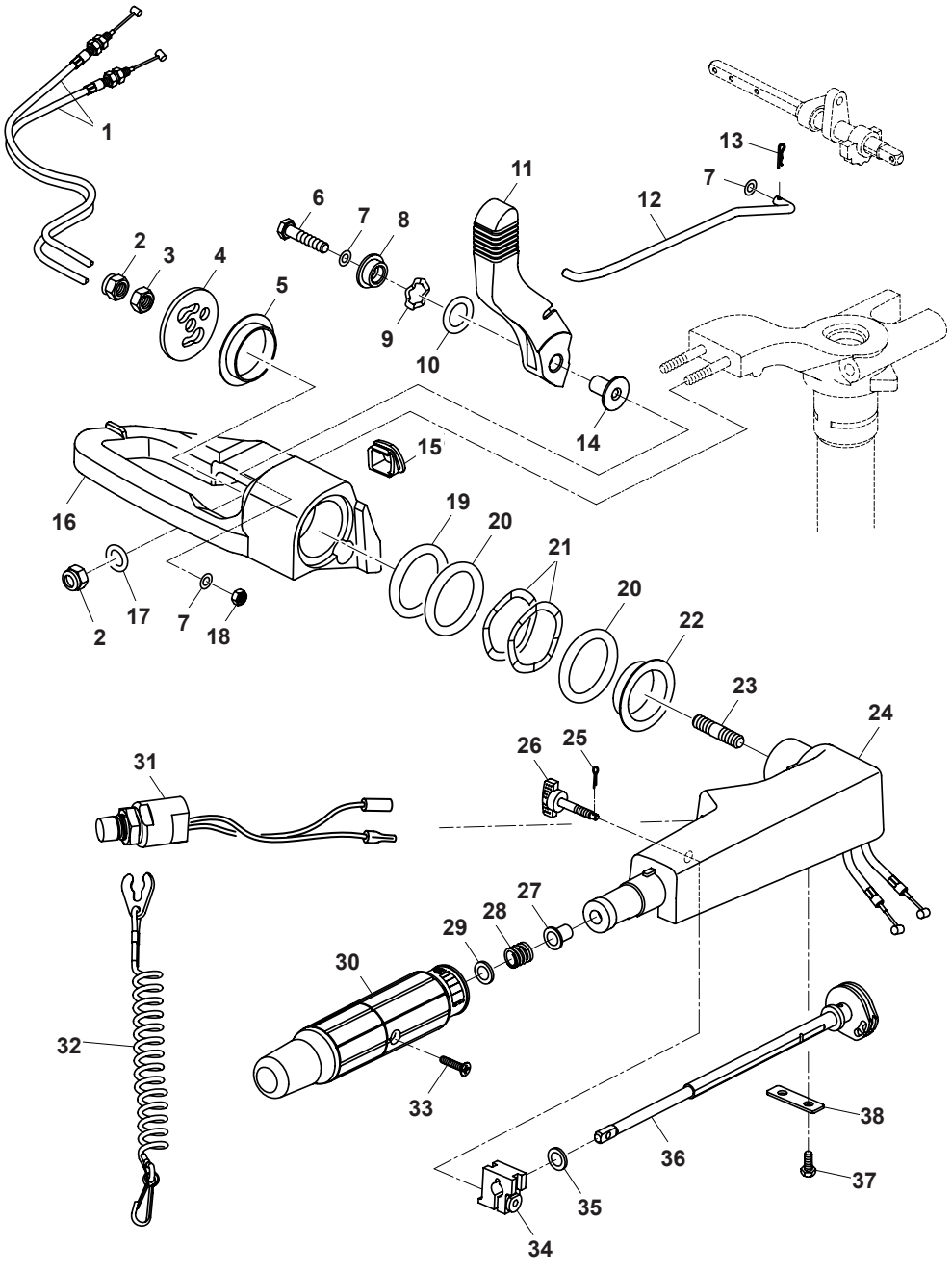

BOAT-parts.se

RECAMBIOS MARINOS S.L.

SOPORTE MOTOR 1 / BRACKET 1 / SUPPORTO MOTORE 1

Nº	Ref.	Description	Quanty
1	PAF25-01010312	LOCKING HANDLE ASSY	1
2	PAF15-01010305-3	JACKET, HANDLE	1
3	PAF25-01010311	BUSHING, LOCKING HANDLE	1
4	PAF25-01010009	WASHER, NYLON	2
5	PAF25-01010321	DETENT PLATE, TILT	2
6	PAF25-01010008	WAVE WASHER	2
7	PAF25-01010007	SCREW, PROLATE HEXAGON	2
8	PAF25-01010318	PIN, DETENT PLATE	2
9	PAF25-01010319	NYLON BUSHING, PIN	2
10	PAGB/T879.2- 3x18	PIN 3x18	1
11	PAT40-01010102	LIMITING HANDLE, TILT	1
12	PAGB/T6182-M8	LOCKING NUT M8	2
13	PAF25-01010010	THICK WASHER 8	2
14	PAF25-01010200	CLAMP BRACKET ASSY (RIGHT)	1
15	PAF25-01010011	PLASTIC NUT	2
16	PAF15-01010007	SELF-LOCKING NUT, BRACKET	2
17	PAF25-01010004	PLATE, TWO HOLE	1
18	PAF25-01010102	CLAMP HANDLE, STERN	2
19	PAF25-01010104	CLAMP SCREW, STERN	2
20	PAF25-01010103	RIVET, CLAMP HANDLE	2

Nº	Ref.	Description	Quanty
21	PAF4-01010003	CLAMP PAD	2
22	PAGB/T6170-M8	NUT M8	1
23	PAGB/T93-8	WASHER, SPRING 8	1
24	PAGB/T97.1-8	WASHER 8	1
25	PAT40-01010101	LIMITING SHAFT, TILT	1
26	PAF25-01010003	WASHER	2
27	PAF25-01010002	BUSH, NYLON	2
28	PAF25-01010301L	ROTARY BRACKET (L)	1
29	PAGB/T7940.1-M6	OIL CUP M6	3
30	PAT36-04000023	LINE CLAMP	1
31	PAF25-01010302	SEAL, BOLT	1
32	PAF25-01010303	FLANG BOLT M8x20	1
33	PAF15-01010001	BOLT, CLAMP BRACKET	1
34	PAF25-01010006	TUBE, BOLT	1
35	PAF25-01010100	CLAMP BRACKET ASSY (LEFT)	1
36	PAF25-01010403	CONICAL SPRING	1
37	PAF25-01010400	LIMITING ROD ASSY	1
38	PAF25-01010005	LONG BOLT M8x255	1
39	PAF25-01010309	BUSHING, LOCKING HANDLE	1
40	PAF25-01010315	CONNECTING ROD, BRACKET	1
41	PAGB/T818-M5x6	SCREW, PAN HBAD M5x6	1
42	PAF25-01010313	LEVER, ANGLE ORIENTATION	1
43	PAF25-01010305	LONG SHAFT, LOCKING FRAME	1
44	PAGB/T91-Ø2x12	COTTER PIN Ø2x12	4
45	PAGB/T896-9	CIRCLIP 9	2
46	PAF25-01010304	TENSION SPRING, LOCKING FRAME	2
47	PAF25-01010307-3	SHORT SHAFT, OUTER BRACKET	1
48	PAF25-01010307-4	OUTER BRACKET (B)	1
49	PAF25-01010307-1	INNER BRACKET	1
50	PAF25-01010307-2	OUTER BRACKET (A)	1
51	PAF25-01010306	TUBE, LONG SHAFT	1

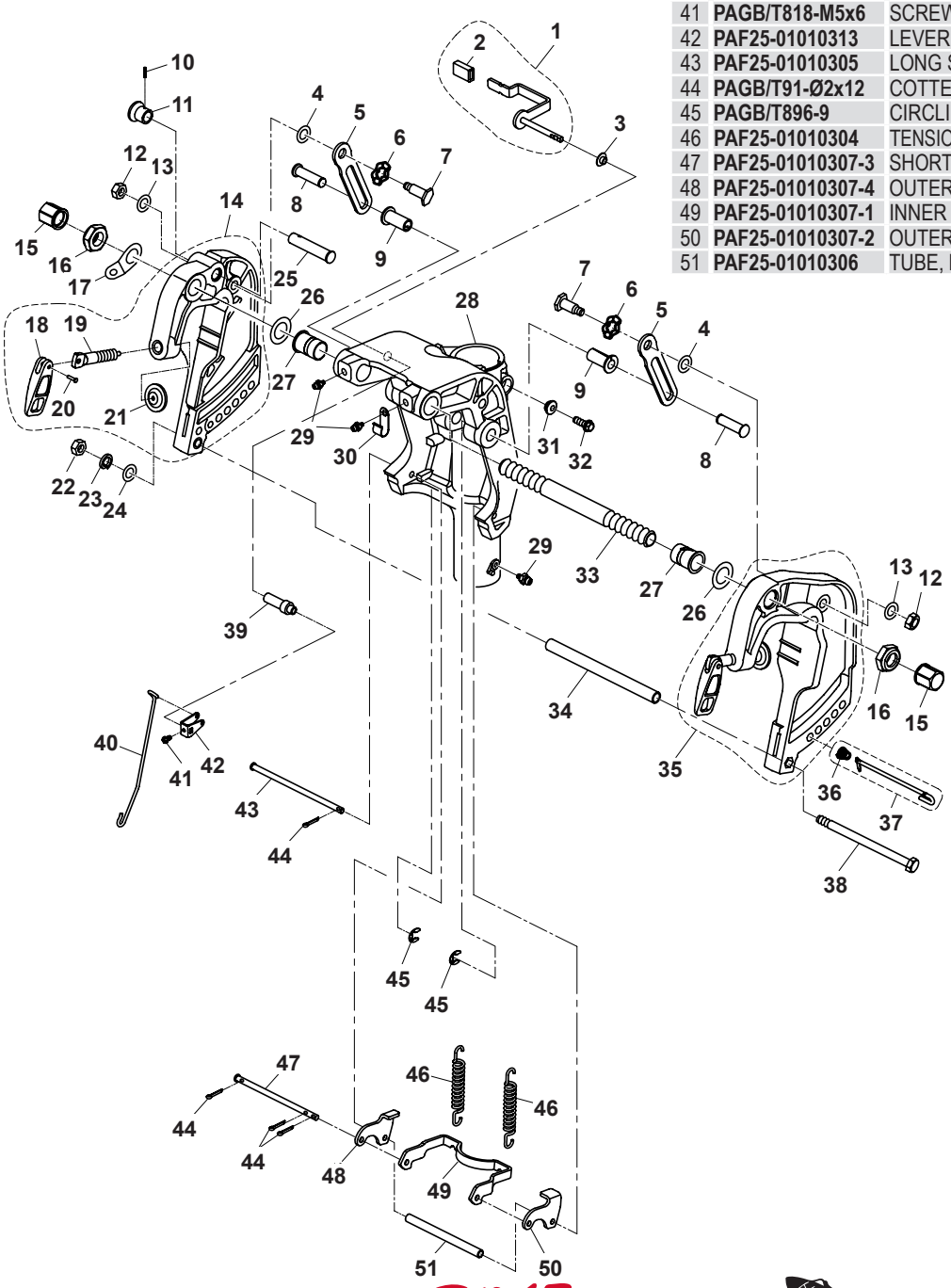

BOAT-parts.se

SOPORTE MOTOR 2 / BRACKET 2 / SUPPORTO MOTORE 2

Nº	Ref.	Description	Quanty
1	**PAF25-02000016**	LONG BOLT	2
2	**PAF25-02000015**	PLATE, ABSORBER	1
3	**PAF25-02030000**	SHOCI ABSORBER ASSY, DOUBLE HOLE	1
4	**PAGB/T5783-M8x30**	BOLT M8x30	3
5	**PAGB/T97.1-8**	WASHER 8	5
6	**PAF25-01020001L**	BRACKET, STEERING (L)	1
7	**PAF40-01020002**	BOLT, DOUBLE HEAD (BM)	2
	PAF25-01020002	BOLT, DOUBLE HEAD (FW)	2
8	**PAF40-01000004**	PADDING BLOCK, STEERING BRACKET (BM)	1
9	**PAGB/T889.2-M8x1.25**	LOCKNUT M8x1.25	2
10	**PAF25-01000003**	UPPER WASHER, ROTARY BRACKET	1
11	**PAF25-01000001**	UPPER BUSHING, ROTARY BRACKET	1
12	**PAF25-01000002**	FRICTION PAD ASSY	1

Nº	Ref.	Description	Quanty
13	**PAF25-01000004L**	LOWER BUSHING, ROTARY BRACKET	1
14	**PAF25-01000005L**	O-RING, LOWER BUSHING	1
15	**PAF25-01000006L**	LOWER WASHER, ROTARY BRACKET	1
16	**PAF25-00000005**	NUT M10	4
17	**PAF25-00000016**	SHELL, MOUNT DAMPER (RIGHT)	1
18	**PAF25-00000002**	MOUNT DAMPER, LEFT AND RIGHT	2
19	**PAF25-00000003**	MOUNT DAMPER, FRONT	1
20	**PAGB/T818-M6x8**	SCREW M6x8	1
21	**PAF25-02000002**	TIGHTWIRE, EARTHING	1
22	**PAGB/T97.1-10**	WASHER 10	4
23	**PAF25-00000007**	BOLT M10x80	2
24	**PAF25-00000006**	BOLT M10x120	2
25	**PAF25-00000015**	SHELL, MOUNT DAMPER (LEFT)	1

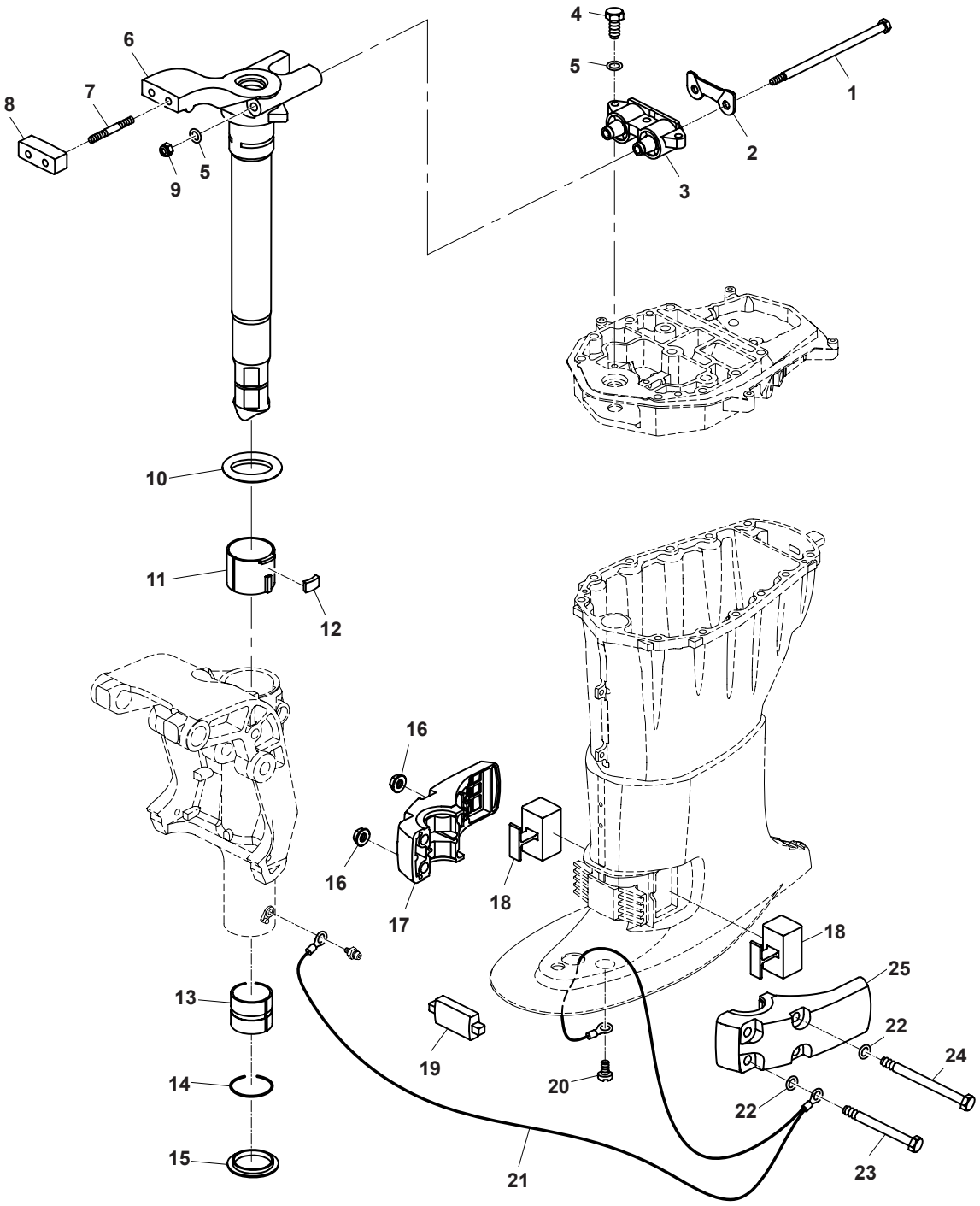

BOAT-parts.se

RECAMBIOS MARINOS S.L.

SOPORTE MOTOR 3 / BRACKET 3 / SUPPORTO MOTORE 3

Nº	Ref.	Description	Quanty
1	**PAT40-01010100-A**	RIGHT BRACKET ASSY	1
2	**PAE10-01010003**	BUSH	1
3	**PAE10-01010001**	PIN	1
4	**PAGB/T896-9**	CIRCLIP 9	2
5	**PAF25-01010324**	BUSH	2
6	**PAT40-01010001-A**	LEFT BRACKET	1
7	**PAGB/T10.1-M10x1.5x45**	SCREW M10x1.5x45	2
8	**PAGB/T97.1-10**	WASHER 10	2
9	**PAGB/T889.1-M10x1.5**	NUT, SELF-LOCKING M10x1.5	2
10	**PAE10-01010009**	WIRE, ANODE	2
11	**PAGB/T97.1-6**	WASHER 6	4
12	**PAGB/T5783-M6x10**	BOLT M6x10	2
13	**PAGB/T5783-M8x16**	BOLT M8x16	2
14	**PAE10-01010007**	WASHER, PLATE	2
15	**PAE10-01010005**	BUSH A	2
16	**PAE10-01010004**	PIN	1
17	**PAE10-01010006**	BUSH B	1
18	**PAGB/T5783-M6x25**	BOLT M6x25	2
19	**PAE10-01010008**	ANODE	1
20	**PAGB/T879.2-Ø3x18**	PIN 1&3x18	1
21	**PAT40-01010102**	HANDLE	1
22	**PAT40-01010101**	LIMITATIVE POSITION SHAFT	1
23	**PAT40-01010002-A**	RIGHT BRACKET	1

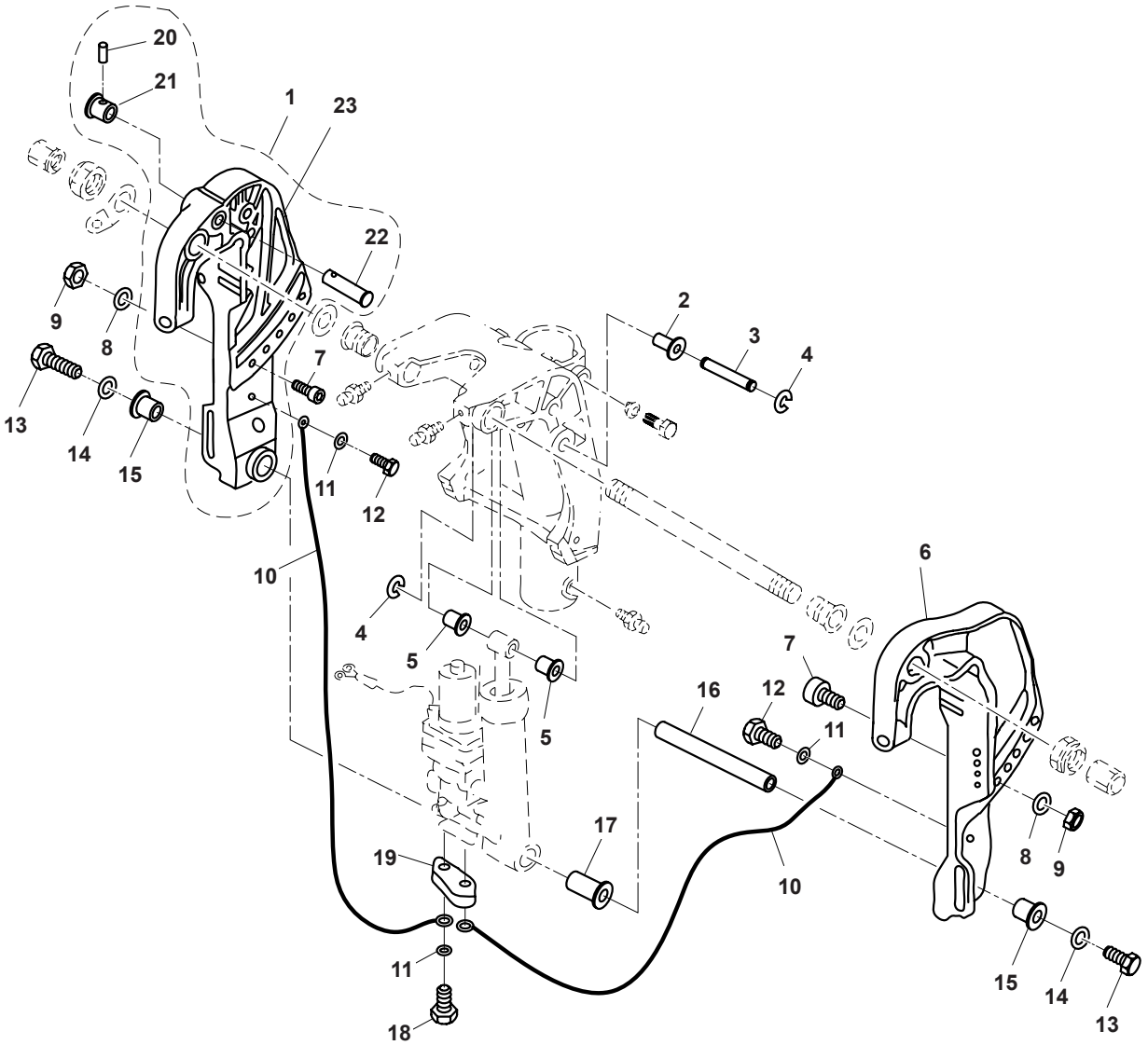

BOAT-parts.se

COLA SUPERIOR / UPPER CASING / PARTE ALTA PIEDE

Nº	Ref.	Description	Quanty
1	**PAF25-02010002**	OIL SEAL 16x30x6	1
2	**PAF25-00000014**	PIN Ø8x12	2
3	**PAF15-04000005**	WATER NOZZLE	1
4	**PAF25-02010003**	JOINT B, GAS PIPE	1
5	**PAF40-02010001**	SEAT, OUTLET MANIFOLD	1
6	**PAF15-07010005**	PLUG 1/4	1
7	**PAF25-02010005**	ANODE	1
8	**PAF15-07010009**	SEAL, ANODE	1
9	**PAF15-07010011**	COVER, ANODE	1
10	**PAGB/T97.1-5**	WASHER 5	3
11	**PAGB/T5783-M5x12**	BOLT M5x12	1
12	**PAF15-07010012**	PLATE, ANODE	1
13	**PAGB/T97.1-6**	WASHER 6	10
14	**PAGB/T5783-M6x20**	BOLT M6x20	1
15	**PAF25-02000011**	GASKET, EXHAUST PIPE	1
16	**PAF40-02010005**	EXHAUST PIPE	1

Nº	Ref.	Description	Quanty
17	**PAGB/T5783-M6x50**	BOLT M6x50	3
18	**PAF40-02010006**	SEAL RING, EXHAUST PIPE	1
19	**PAF40-02010007**	GASKET, CLAPBOARD	2
20	**PAF40-02010008**	CLAPBOARD	1
21	**PAF40-02010009L**	OUTLET MANIFOLD	1
22	**PAF40-02000008**	RUBBER JACKET B, OUTLET MANIFOLD	1
23	**PAGB/T5783-M6x25**	BOLT M6x25	6
24	**PAF40-02000007**	RUBBER JACKET A, OUTLET MANIFOLD	1
25	**PAGB/T818-M5x16**	SCREW M5x16	2
26	**PAF40-02000004**	EXHAUST GUIDE, PLASTIC	1
27	**PAF25-02000003**	CLAPBOARD, EXHAUST	1
28	**PAF15-00000006**	PIN Ø6x12	2
29	**PAGB/T97.1-8**	WASHER 8	10
30	**PAGB/T5783-M8x30**	BOLT M8x30	4
31	**PAF40-00000002**	RUBBER PLUG, UPPER CASING	1
32	**PAGB/T5783-M8x80**	BOLT M8x80	8
33	**PAF40-02000001L**	UPPER CASING (L)	1
34	**PAT40-02000004**	RUBBER BUSHING	1
35	**PAT40-02000003**	BUSHING, DRIVE SHAFT	1
36	**PAF40-02000003**	JACKET, DRIVE SHAFT	1
37	**PAGB/T893.1-32**	CIRCLIP 32	1
37	**PAGB/T893.1-30**	CIRCLIP 30	
38	**PAF15-04000003**	WASHER, BOLT	1
39	**PAF15-04000002**	BOLT, OIL DRAIN	1

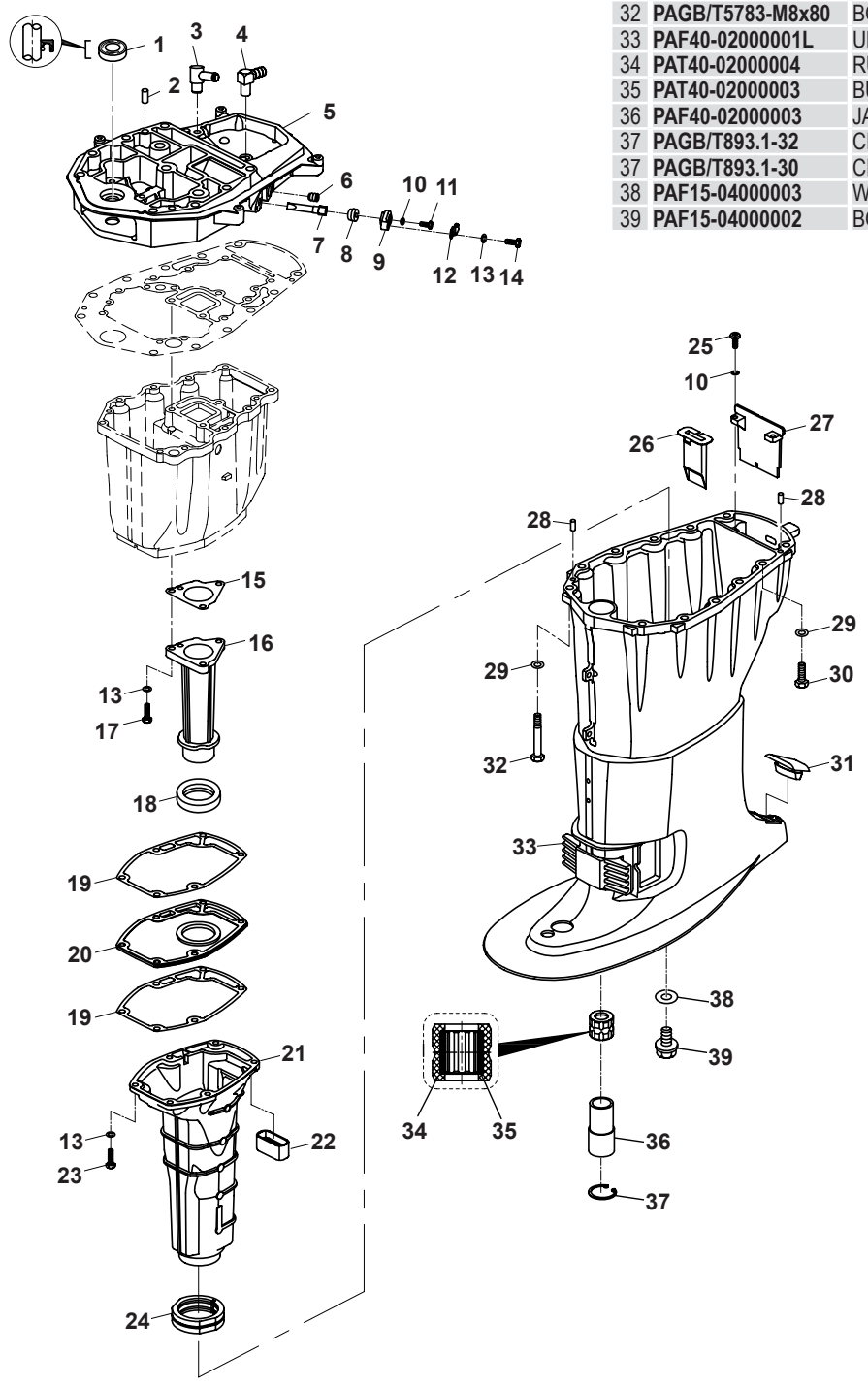

RECAMBIOS MARINOS S.L.

BOAT-parts.se

COLA INFERIOR 1 / LOWER CASING & DRIVE 1 / PARTE INFERIORE PIEDE 1

Nº	Ref.	Description	Quanty
1	**PAF40-04000000L**	LOWER CASING ASSY (L)	1
1	**PAF40-04000000S**	LOWER CASING ASSY (S)	1
2	**PAT40-04000001**	LOWER CASING	1
3	**PAT40-04000006**	NUT, PINION	1
4	**PAT40-04000005**	PINION	1
5	**PAGB/T820-M5x30**	SCREW M5x30	1
6	**PAT40-04000022**	WATER INLET A	1
7	**PAT40-04000004-1**	SHIM (t: 0.10 mm)	1
7	**PAT40-04000004-2**	SHIM (t: 0.12 mm)	1
7	**PAT40-04000004-3**	SHIM (t: 0.15 mm)	1
7	**PAT40-04000004-4**	SHIM (t: 0.18 mm)	1
7	**PAT40-04000004-5**	SHIM (t: 0.30 mm)	1
7	**PAT40-04000004-6**	SHIM (t: 0.40 mm)	1
7	**PAT40-04000004-7**	SHIM (t: 0.50mm)	1
8	**PAKOYOHI-CAP322/32**	ROLLER BEARING	1
9	**PAT40-04020000**	FORWARD GEAR ASSY	1
10	**PAT40-04050000**	PROPELLER SHAFT ASSY	1
11	**PAT40-04050006**	PLUNGER, SHIFT	1
12	**PAT40-04050002**	SPRING, CLUTCH	1
13	**PAT40-04050003**	DOG CLUTCH	1
14	**PAT40-04050004**	PIN, CLUTCH	1
15	**PAT40-04050005**	ANNULAR SPRING, CLUTCH	1
16	**PAT40-04050001**	SHAFT, PROPELLER	1
17	**PAT40-04050007**	WASHER, REVERSE GEAR	1
18	**PAT40-04060006**	GEAR, REVERSE	1
19	**PAT40-04060005-1**	SHIM (T= 0.10 mm)	1
19	**PAT40-04060005-2**	SHIM (T= 0.12 mm)	1
19	**PAT40-04060005-3**	SHIM (T= 0.15 mm)	1
19	**PAT40-04060005-4**	SHIM (T= 0.18 mm)	1
19	**PAT40-04060005-5**	SHIM (T= 0.30 mm)	1
19	**PAT40-04060005-6**	SHIM (T= 0.40 mm)	1
19	**PAT40-04060005-7**	SHIM (T= 0.50 mm)	1
20	**PAT40-04060000**	COVER ASSY, LOWER CASING	1
21	**PAKOYO 6007C4**	BEARING 6007	1
22	**PAT40-04060002**	O-RING A, COVER	1
23	**PAT40-04060003**	O-RING B, COVER	2
24	**PAT40-04060001**	COVER, LOWER CASING	1
25	**PANTN HK 2220 JS**	BEARING 2220	1
26	**PAF25-04010003**	OIL SEAL	4
27	**PAGB/T5783-M8x25**	BOLT M8x25	2
28	**PAGB/T97.1-8**	WASHER 8	2
29	**PAT40-04000008**	BIG WASHER	1
30	**PAT40-04040000**	CASING A ASSY, OIL SEAL	1
31	**PAJASO F404 24-050**	O-RING, CASING A	1
32	**PAT40-04040001**	CASING A, OIL SEAL	1
33	**PAT40-04000009**	COVER, OIL SEAL	1
34	**PAT40-04000010**	GASKET, WATER PUMP SEAT	1
35	**PAT40-04000011**	OUTER PLATE	1
36	**PAF25-04000007**	DOWEL PIN Ø4x10	2
37	**PAT40-04000205**	O-RING	1
38	**PAF25-04040000**	IMPELLER ASSY, WATER PUMP	1
39	**PAT40-04000202**	INNER SHELL, WATER PUMP	1
40	**PAT40-04000201**	WATER PUMP HOUSING	1
41	**PAT40-04000012**	PLATE, WATER PUMP	4
42	**PAGB/T5783-M8x30**	BOLT M8x30	4
43	**PAF40-04010000L**	DRIVE SHAFT ASSY	1
44	**PAF25-04000015**	WOODRUFF KEY	1
45	**PA3005 JR KOYO**	BEARING 32005	1
46	**PAT40-04000003-1**	SHIM (t: 0.10 mm)	1
46	**PAT40-04000003-2**	SHIM (t: 0.12 mm)	1
46	**PAT40-04000003-3**	SHIM (t: 0.15 mm)	1
46	**PAT40-04000003-4**	SHIM (t: 0.18 mm)	1
46	**PAT40-04000003-5**	SHIM (t: 0.30 mm)	1
46	**PAT40-04000003-6**	SHIM (t: 0.40 mm)	1
46	**PAT40-04000003-7**	SHIM (t: 0.50 mm)	1
47	**PAT40-04000002**	BUSHING, NYLON	1
48	**PANSK B-1416**	QUILL BEARING	1
49	**PAF15-05000035**	COLUMN NUT	1
50	**PAGB/T6172.1-M6**	NUT M6	1
51	**PAF15-06 020004**	O-RING 14x4.2	1
52	**PAT40-04000007**	COVER PLATE, CAMSHAFT	1
53	**PAJASO F404 31-035**	O-RING	1
54	**PAGB/T97.1-6**	WASHER 6	1
55	**PAF40-04020000**	CAM ASSY, SHIFT ROD	1
56	**PAGB/T889.1-M5**	LOCKING NUT M5	1
51	**PAT40-04000023**	WATER INLET B	1
58	**PAF4-03000023**	PLUG, OIL HOSE	1
59	**PAF4-03000024**	GASKET	2
60	**PAF25-04000031**	PLUG, OIL RELEASE	1

BOAT-parts.se

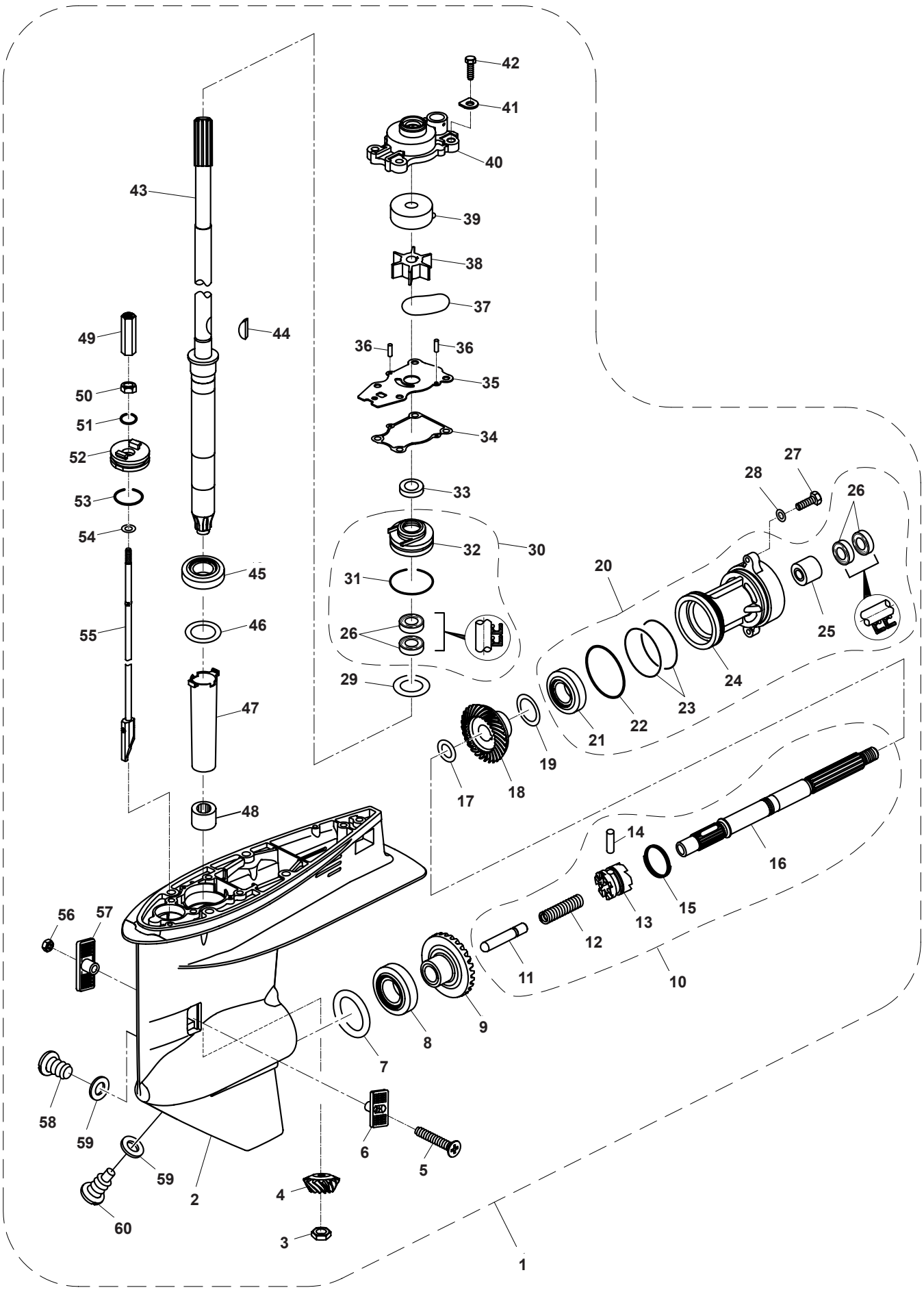

RECAMBIOS MARINOS S.L.

BOAT-parts.se

COLA INFERIOR 2 / LOWER CASING & DRIVE 2 / PARTE INFERIORE PIEDE 2

Nº	Ref.	Description	Quanty
1	PAF25-02000019	NYLON WASHER, WATER PIPE	1
2	PAF40-02000005L	WATER PIPE (L)	1
3	PAT40-02010005	SEAL, WATER PIPE	1
4	PAT40-02000002	GUIDE BUSHING, WATER PIPE	1
5	PAT40-04000204	NYLON BUSHING, WATER PIPE	1
6	PAT40-04000203	SEAL	1
7	PAT40-04000014	WATER ENVELOP	1
8	PAT40-04000013	PLATE, WATER ENVELOP	1
9	PAGB/T5783-M8x35	BOLT M8x35	1
10	PAGB/T93-8	SPRING-WASHER 8	2
11	PAGB/T97.1-8	WASHER 8	3
12	PAF15-00000006	DOWEL PIN Ø6x12	2
13	PAGB/T97.1-10	WASHER 10	4
14	PAF40-02000010	BOLT M10x1.25x40	4
15	PAGB/T5783-M8x65	BOLT M8x65	1
16	PAGB/T5783-M8x25	BOLT M8x25	1
17	PAT40-00000010	ANODE	1
18	PAT40-00000009	ANODE A, LOWER CASING	1
19	PAT40-04000018	SPACER, PROPELLER	1
20	PAT40-04070000	PROPELLER ASSY	1
21	PAT40-04000019	BUSH A, PROPELLER	1
22	PA40-04000020	BUSH B, PROPELLER	1
23	PAT40-04000021	NUT	1
24	PAGB/T91-3.2x25	COTTER PIN Ø3.2x25	1

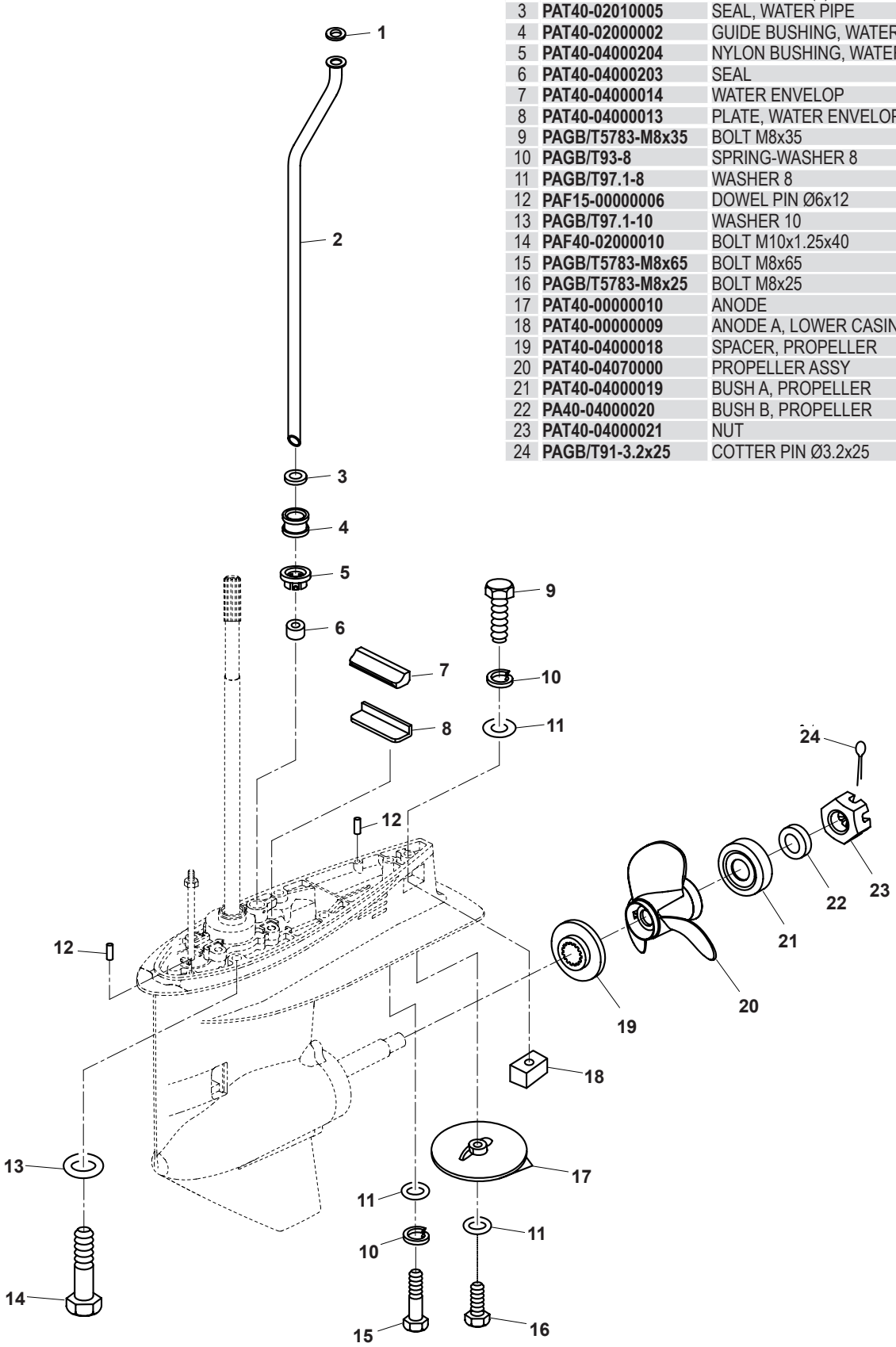

BOAT-parts.se

CARTER / OIL PAN / COPPA L'OLLIO

Nº	Ref.	Description	Quanty
1	**PAF40-05000032**	OIL LEVEL ASSY	1
2	**PAF25-02010007**	GASKET, OUTLET MANIFOLD	1
3	**PAGB/T97.1-6**	WASHER 6	15
4	**PAGB/T5783-M6x16**	BOLT M6x16	2
5	**PAF40-02010100**	FILTER ASSY	1
6	**PAGB/T5783-M6x25**	BOLT M6x25	13
1	**PAF25-02010006**	GASKET, RELIEF VALVE	1
8	**PAF40-02010010**	SHELL, RELIEF VALVE	1
9	**PAF15-07010004**	PLUG	1
10	**PAF15-00000006**	PIN 6x12	2
11	**PAF40-02010002**	OIL PAN	1
12	**PAF40-02010003**	RUBBER JAM	1
13	**PAF15-04000003**	WASHER, BOLT	1
14	**PAF15-04000002**	BOLT, OIL DRAIN	1
15	**PAF40-02010004**	JACKET, OIL DRAIN	1

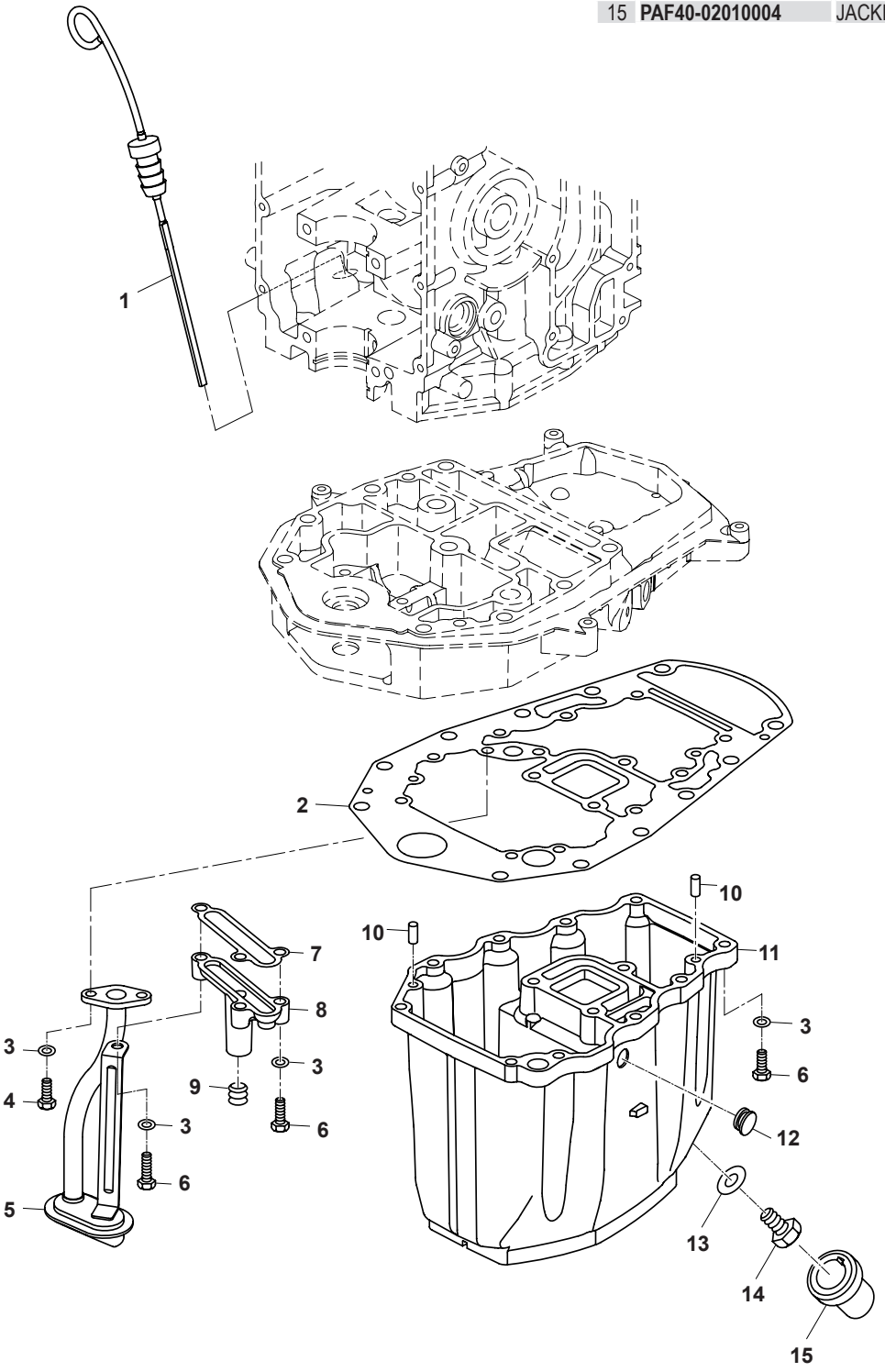

RECAMBIOS MARINOS S.L.

BOAT-parts.se

CAJA DE MANDOS / CONTROL BOX ASSY / SCATOLA COMANDI

Nº	Ref.	Description	Quanty
1	**PAF40-13000000EI**	CONTROL BOX ASSY (EFI)	1
2	**PAHT2.5x60**	CLAMP	2
3	**PAF40-13000200EI**	STARTING SWICH ASSY (EFI)	1
41	**PAT85-08010100**	CONTROL CABLE	1
	PAF40-08010100EI	CONTROL CABLE (EFI)	1
5	**PAF15-11000002W**	PLATE, CONTROL BOX	1
6	**PAGB/T819.2-M5x12**	SCREW PAN HEAD M5x12	2
7	**PAF15-13020007W**	THROTTLE HANDLE, INCHING	1
8	**PAF15-13000005W**	BUSH,CAM	2
9	**PAF15-13020006W**	BUSH, HANDLE	1
10	**PAF15-11000001W**	BLOCK, RUBBER	1
11	**PAF15-13000014W**	JACKET, CABLE	1
12	**PAF4-01090401**	STOPER, HANG ROPE ASSY	1
13	**PAF15-13000400W**	ENGINE STOP SWICH ASSY	1
14	**PAF15-13000203W**	INSULATED PLUG “B”	2
15	**PAF15-13000202W**	INSULATED PLUG “A”	1
16	**PAF15-13020001W**	COVER, CONTROL BOX	1
17	**PAF15-13000013W**	SMALL COVER, CONTROL BOX	1
18	**PAF15-13020005W**	WASHER "B", WAVE	1
19	**PAF15-13020100W**	LOCKED DISK ASSY	1
20	**PAF15-13020002W**	TORSION SPRING	1
21	**PAF15-13020003W**	EACH LOCKED PULLEY	1
22	**PAF15-13020004W**	PLATE, PULLEY SPRING	1
23	**PAGB/T818-M4x6**	PAN HEAD SCREW M4x6	2
24	**PAF15-13020000W**	COVER ASSY, CONTROL BOX	1
25	**PAGB/T5783-M8x30**	BOLT M8x30	1
26	**PAGB/T97.1-8**	WASHER 8	1
27	**PAT20-13000500W**	MACHINE, CONTROL ACCELEROGRAPH	1
28	**PAF15-13000007W**	WASHER	1
29	**PAGB/T896-6**	PIN, COTTER 6	3
30	**PAF25-07000007W**	CONTROL CABLE TIE IN “B”	2
31	**PAF15-13000002W**	CAM MECHANISM	1
32	**PAGB/T818-M3x14**	PAN HEAD SCREW M3X14	2
33	**PAF15-13000800W**	INCHING SWITCH	1
34	**PAF15-13000003W**	PLATE	1
35	**PAF15-13000004W**	PULLEY	1
36	**PAF15-13000001W**	SHIFT SPRING PLATE “B”	5
37	**PAF15-12000016W**	MARK 16	1
38	**PAGB/T6170-M6**	NUT M6	3
39	**PAF15-13000008W**	WEARABLE PLATE, CAM MACHANISM	1
40	**PAF15-13000700W**	SHIFT SWING LINK	1
41	**PAFI5-13000601W**	ADJUSTER FASTNESS ASSY	1
42	**PAGB/T5783-M5x25**	BOLT M5x25	2
43	**PAGB/T6170-M5**	NUT M5	2
44	**PAF15-13000300W**	BUZZER ASSY	1
45	**PAF15-13000602W**	ADJUSTER PIN	1
46	**PAGB/T5287-6**	BIG WASHER 6	3
47	**PAF15-13000006W**	WEARABLE PLATE	1
48	**PAFI5-13000011W**	BUSH, SHIFT SWING LINK	1
49	**PAF15-13000012W**	BRACKET, CONTROL BOX	1
50	**PAF15-12000013W**	MARK 13	1
51	**PAFI5-13000015W**	COVER, WATERPROOF	1
52	**PAF15-13010010W**	BLOCK, CONTROL HANDLE	1
53	**PAGB/T956.1-5**	WASHER, LOCKED 5	2
54	**PAGB/T819.2-M5x18**	SCREW, PAN HEAD M5x18	7
55	**PAE4-10040100W**	SWITCH ASSY, TILT	1
56	**PAF15-13010001W**	CONTROL HANDLE	1
57	**PAF15-13010002W**	CONTROL HANDLE BAR	1
58	**PAGB/T84.5-ST4.8x12**	SCREW, PAN HEAD ST4.8x12	1
59	**PAGB/T818-M4x10**	SCREW, PAN HEAD M4x10	3
60	**PAFI5-13010009W**	COVER, CONTROL HANDLE	1
61	**PAF15-13010005W**	SPRING, COMPRESSION	1
62	**PAF15-13010004W**	PART, ORIENTATION CONTROL	1
63	**PAF15-13010008W**	PLATE, ORIENTATION PART	1
64	**PAGB/T820-M6x90**	SCREW, PAN HEAD M6x90	3
65	**PAE4-07020015W**	CHAFING PLATE, WIRE	1

BOAT-parts.se

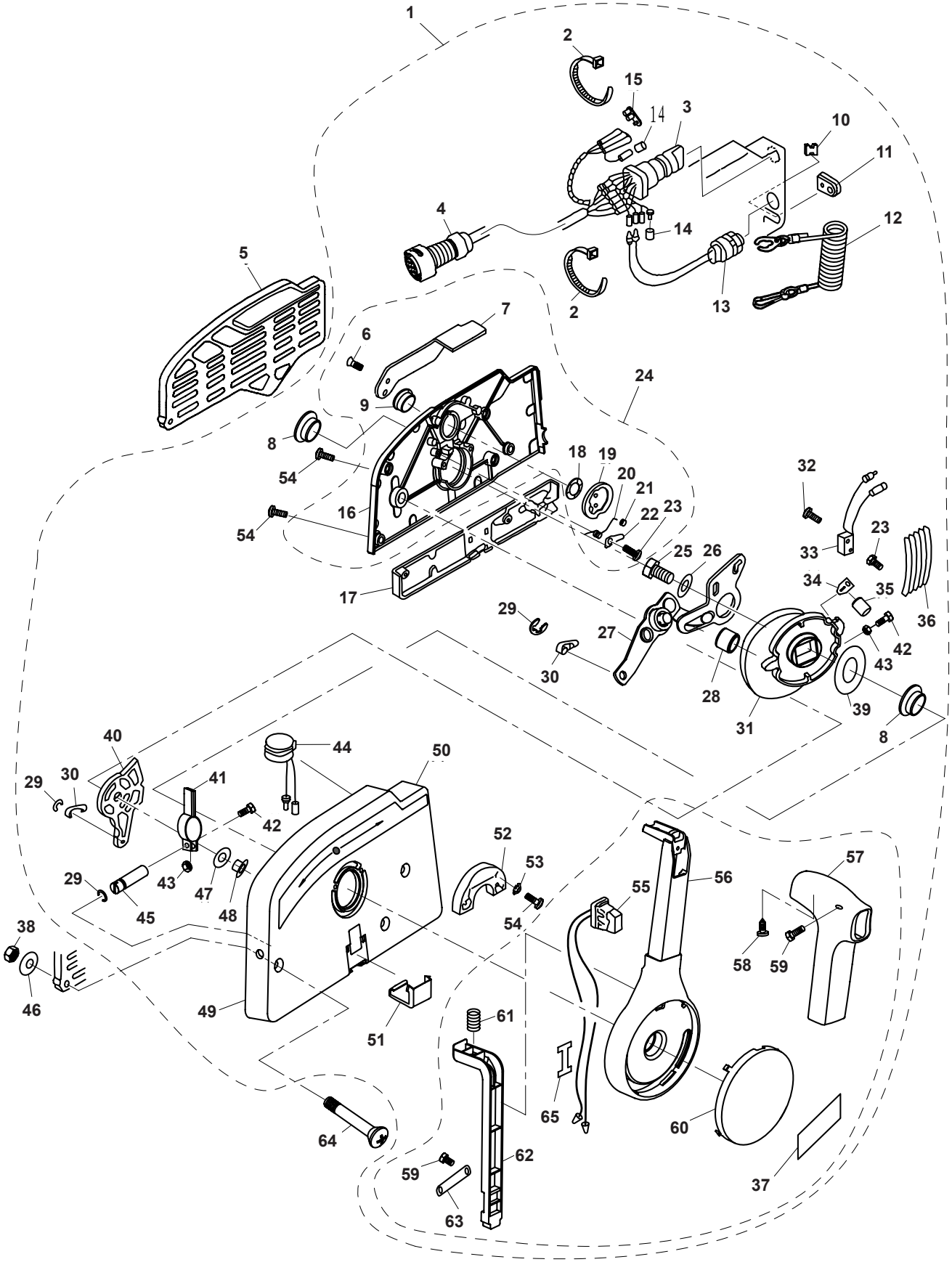

RECAMBIOS MARINOS S.L.

BOAT-parts.se

BOMBA DE ACEITE / OIL PUMP / POMPA OLIO

Nº	Ref.	Description	Quanty
1	PAF40-05000007	NUT, TIMING PULLEY	1
2	PAF25-05000021	TIMING PULLEY	1
3	PAF25-05000023	TIMING BELT	1
4	PAF40-05000008	PLATE, TIMING BELT	1
5	PAF4-04000019	WOODRUFF KEY	1
6	PAGB/T5785-M10x1.25x40	BOLT M10x1.25x40	1
7	PAGB/T97.1-10	WASHER 10	1
8	PAF25-05050018	WASHER, DRIVEN PULLEY	1
9	PAF40-05040006	DRIVEN PULLEY	1
10	PAF25-05050016	DOWEL PIN, DRIVEN PULLEY	1
11	PAF40-05040200	CAMSHAFT ASSY	1
12	PAF40-05040407	GASKET, OIL PUMP	1
13	PAF40-05040400	OIL PUMP ASSY	1
14	PAF40-05040401	BODY, OIL PUMP	1
15	PAF40-05040405	SEAL, OIL PUMP	1
16	PAF40-05040404	ROTOR SHAFT, OIL PUMP	1
17	PAGB/T309 Ø4x15.8	NEEDLE ROLLER Ø4x15.8	1
18	PAF40-05040403	INNER ROTOR, OIL PUMP	1
19	PAF40-05040402	OUTER ROTOR, OIL PUMP	1
20	PAF15-07110003	PLUNGER, OIL RELIEF VALVE	1
21	PAF40-05040408	SPRING, OIL RELIEF VALVE	1
22	PAF40-05040406	COVER, OIL PUMP	1
23	PAGB/T823-M6x16	SCREW M6x16	2
24	PAGB/T97.1-6	WASHER 6	4
25	PAGB/T5782-M6x40	BOLT M6x40	4

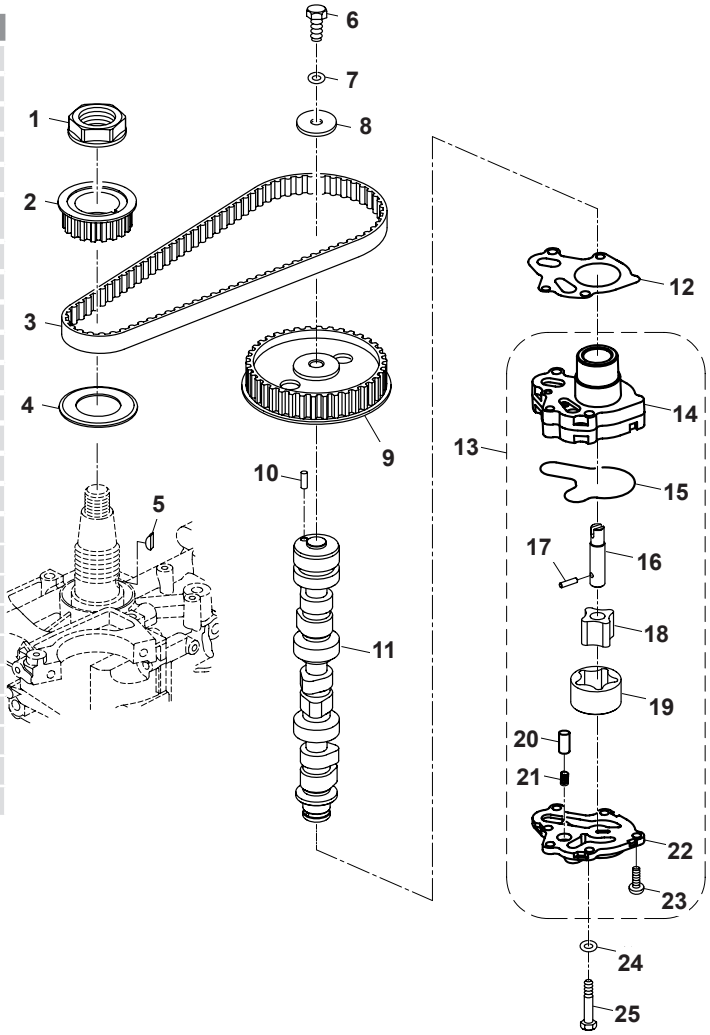

DEPÓSITO EXTERNO / OUTER FUER TANK / SERBATOIO ESTERNO

Nº	Ref.	Description	Quanty
1	PAF15-09000000	OIL TUBE ASSY	1
2	PAF15-10000000	FUEL TANK ASSY	1
3	PAF15-10010000	COVER ASSY, FUEL TANK	1
4	PAGB/T818-M5x18	SCREW, PAIN HEAD M5x18	4
5	PAGB/T97.1-5	WASHER 5	4
6	PAF15-10020000	OLEOMETER ASSY	1
7	PAF15-10000003	GASKET	1
8	PAF15-10000002	STRAINER	1
9	PAF15-10000001	FUEL TANK (24 L)	1

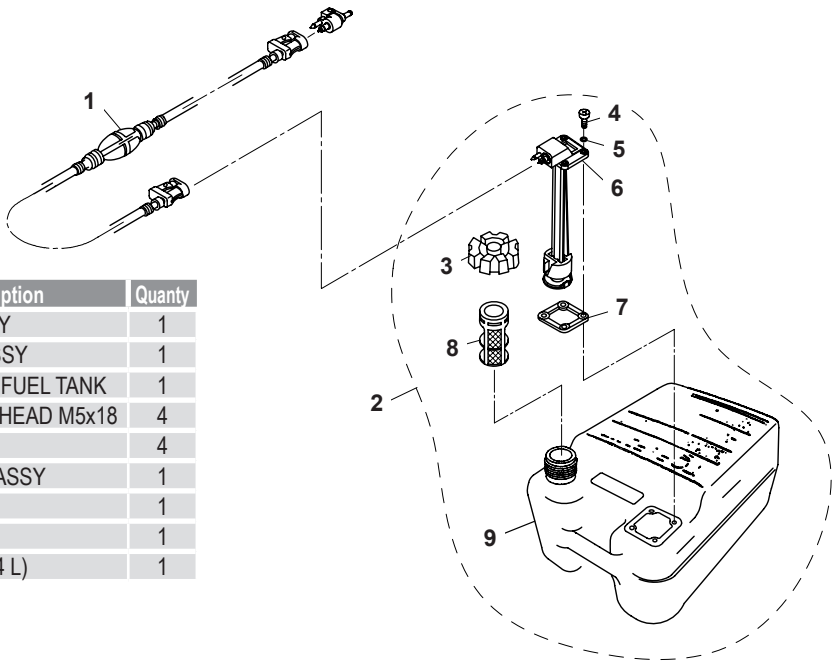

BOAT-parts.se

BOMBA DE ACEITE ELÉCTRICA / ELECTRIC OIL PUMP / POMPA OLIO ELLETTRICA

Nº	Ref.	Description	Quanty
1	PAF40-05000069BI	AIR PIPE C	1
2	PAT5-04000200	CHECK VALVE	1
3	PAF40-05000070BI	AIR PIPE D	2
4	PAF15-05000011	THREE WAY	1
5	PAF40-05000051BI	AIR PIPE B	1
6	PAF40-05100000BI	OIL PUMP ASSY	1
7	PAF40-05010400EI	JOINT ASSY, OIL PUMP	1
8	PAGB/T3452.1-15.8x3.1	O-RING 15.8x3.1	1
9	PAF40-05100100EI	BODY ASSY, OIL PUIIP	1
10	PAS7133-Ø13.3	SINGLE LUG CLAMP	4
11	PAF40-05100010EI	SHAPED TUBE A, OIL PUMP	1
12	PAF40-05100004EI	SHAPED TUBE B, OIL PUMP	1
13	PAF40-05100202EI	CAP, DETECTION VALVE	1
14	PAF40-05100201BI	DETECTION VALVE, OIL PUMP	1
15	PAF40-05100600BI	PRESSURE REGULATOR VALVBE	1
16	PAF40-05100601BI	O-RING, PRESSURE REGULATOR VALVE	1
17	PAF40-05100600-1EI	WASHER, PRESSURE REGULATOR VALVE	2
18	PAF40-05100602BI	CONDUIT TUBE	1
19	PAF40-05100603BI	PLATE, PRESSURE REGULATOR VALVE	1
20	PAGB/T818-M5x12	SCREW M5x12	2
21	PAGB/T818-M4x16	SCREW M4x16	5
22	PAGB/T93-4	SPRING WASHER 4	5
23	PAF40-05100301EI	NEEDLE VALVE	1
24	PAF40-05100302EI	CLAMP SPRING, NEEDLE VALVE	1
25	PAF40-05100003EI	BAFFLE PLATE	1
26	PAGB/T818-M4x8	SCREW M4x8	4
27	PAF40-05100001EI	FLOATER	1
28	PAF40-05100002EI	PIN, FLOATER	1
29	PAF40-05100500EI	OIL PUMP ASSY	1
30	PAF40-05100501EI	RUBBER SLEEVE,OIL PUMP	1
31	PAF40-05100504EI	PADDING BLOCK, OIL PUMP	1
32	PAF40-05100503EI	RUBBER PAD, OIL PUMP	1
33	PAF40-05100502EI	FILTER NET, OIL PUMP	1
34	PAF40-05100704EI	SEAL, OIL CAP	1
35	PAF40-05100701EI	OIL CAP, ELECTRIC PUMP	1
36	PAF25-05090005	BUSHING, DAMPER	3
37	PAF25-05090004	DAMPER	3
38	PAF40-05100800EI	COOLER, FUEL	1
39	PAGB/T97.1-6	WASHER 6	1
40	PAGB/T5783-M6x25	BOLT M6x25	4
41	PAGB/T96-6	BIG WASHER 6	3
42	PAF40-05100703EI	DRAIN BOLT, OIL CUP	1

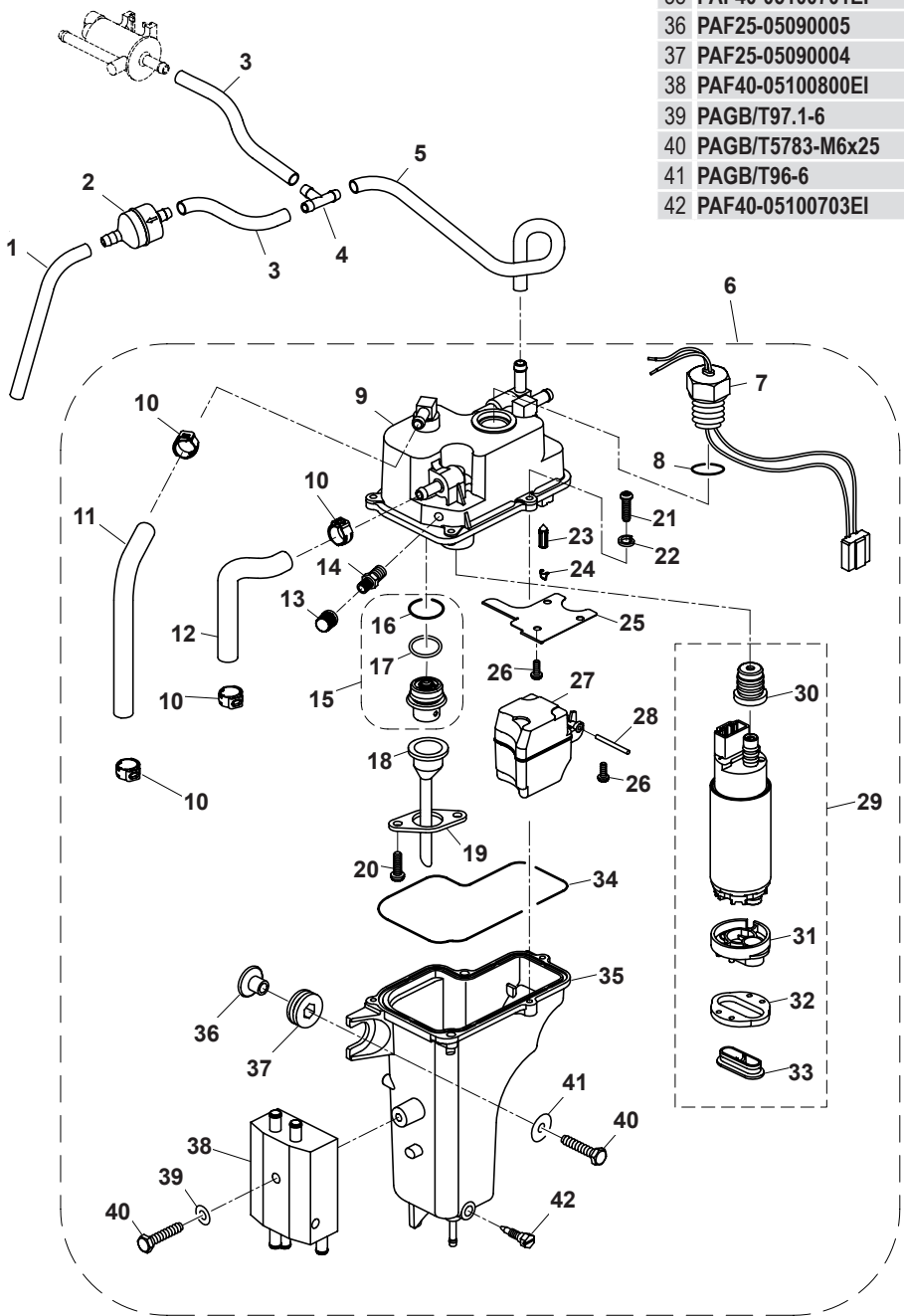

BOAT-parts.se

RECAMBIOS MARINOS S.L.

POWER TRIM & TILT

Nº	Ref.	Description	Quanty
1	**PAT40-10000000**	HYDRAULIC TILT ASSY	1
2	**PAT40-10010000**	LOCATING CYLINDER ASSY	1
3	**PAT40-10030000**	LOCATING CYLINDER & PISTON ASSY	1
4	**PAT40-10030202**	OIL SEAL 15x23x5	1
5	**PAT40-10030200**	PISTON NUT	1
6	**PAJISB 2407 P15T2**	CIRCLIP P15T2	1
7	**PAJISB 2401 P15**	O-RING Ø14.8x2.4	1
8	**PAJASO F404 24-045**	O-RING Ø44.7x2.4	1
9	**PAT40-10030100**	SHAFT, TILT ASSY	1
10	**PAT40-10030301**	PISTON	1
11	**PAGB/T879.4-Ø1.5x12**	PIN 1.5x12	1
12	**PAT85-06020202**	BALL 4	12
13	**PAT85-06020005**	SEAT, SPRING	7
14	**PAT40-10030001**	SPRING	5
15	**PAT40-10030002**	WASHER	1
16	**PAT40-10030003**	WASHER	1
17	**PAGB/T70.2-M10x1.25x40**	SCREW M10x1.25x40	1
18	**PAJISB 2401 P39**	O-RING Ø38.7x3. 5	2
19	**PAJISB 2407 P39T2**	RING, BACK UP P39T2	1
20	**PAT40-10010100**	FREE PISTON SUB ASSY	1
21	**PAT40-10010101**	FREE PISTON	1
22	**PAT40-10010102**	SPRING	1
23	**PAT40-10010104**	SEAL	1
24	**PAT40-10010103**	BUSH, BOLT	1
25	**PAT40-10010105**	BUSH, PISTON	1
26	**PAGB/T70. 2-M4x35**	SCREW M4x35	1
27	**PAF15-07010004**	BLOCK, CYLINDER 1/8"	1
28	**PAT40-10000002**	POSITIONING CYLINDER	1
29	**JPAIS FG11.2**	O-RING Ø10.7xØ1.5	3
30	**PAT40-10000001**	BALL 1/8"	2
31	**PAT85-06020014**	SPRING, PISTON	2
32	**PAT85-06010201**	FILTER	1
33	**PAJIS FG6**	O-RING Ø5.5x1.5	4
34	**PAT40-10020500**	TILT MOTOR	1
35	**PAGB/T70.1-M6x20**	SCREW M6x20	4
36	**PAGB/T3452.1-Ø48x2**	O-RING Ø48x2	1
37	**PAT40-10020004**	SPRING	1
38	**PAT40-10020003**	LINK, MOTOR	1
39	**PAGB/T70.1-M4x25**	BOLT M4x25	4
40	**PAT85-06010705**	ROLLER Ø4x21.8 G2-2-4	2

Nº	Ref.	Description	Quanty
41	**PAT40-10020400**	GEAR PUMP ASSY	1
42	**PAJIS FG5**	O-RING Ø4.5xØ1.5	2
43	**PAT40-10020002**	SPRING	1
44	**PAT85-06010205**	PIN, VALVULA SUPORTE	1
45	**PAT85-06010207**	SEAL, MAIN VALVE	1
46	**PAT40-10020005**	FILTER, PUMP	2
47	**PAJIS FG4**	O-RING Ø3.5x1.5	2
48	**PAT40-10020001**	HOUSING	1
49	**PAT40-10020301**	PIN, VALVE SUPPORT	1
50	**PAJISB 2401 PJ**	O-RING Ø2.8x1.9	1
51	**PAJISB 2401 P8**	O-RING Ø7.8x1.9	1
52	**PAJISB 2401 P9**	O-RING Ø8.8x1.9	3
53	**PAT40-10020302**	SEAT, RELIEF VALVE	1
54	**PAT40-10020303**	SEAT, SPRING	1
55	**PAT40-10020304**	SPRING, UP RELIEF	1
56	**JPAISB 2401 P11**	O-RING Ø10.8x2.4	1
51	**PAT40-10020305**	SCREW, VALVE LOCK	1
58	**PAT85-06010503**	VALVE SUB ASSY	2
59	**PAJISB 2401 P12.5**	O-RING Ø12x1.5	2
60	**PAJIS FG12**	O-RING Ø11.5x1.5	2
61	**PAT85-06010501**	PISTON, SHUTTLE	1
62	**PAT85-06010009**	SCREW	1
63	**PAT85-06010601**	WASHER, SEAL	2
64	**PAT40-10020201**	SEAT, SPRING	1
65	**PAT40-10020202**	SPRING	1
66	**PAJIS FG10**	O-RING Ø9.5x1.5	1
67	**PAT85-06010606**	SCREW, MANUAL RELEASE	1
68	**PAGB/T3452.1-17.5x2.65**	O-RING Ø17.5x2.65	1
69	**PAGB/T893.1-20**	RING, SNAP CIRCLIP 20	1
70	**PAGB/T70.1-M6x75**	BOLT M6x75	3
71	**PAT85-06 010002**	BLOCK, CYLINDER 1/16”	5

BOAT-parts.se

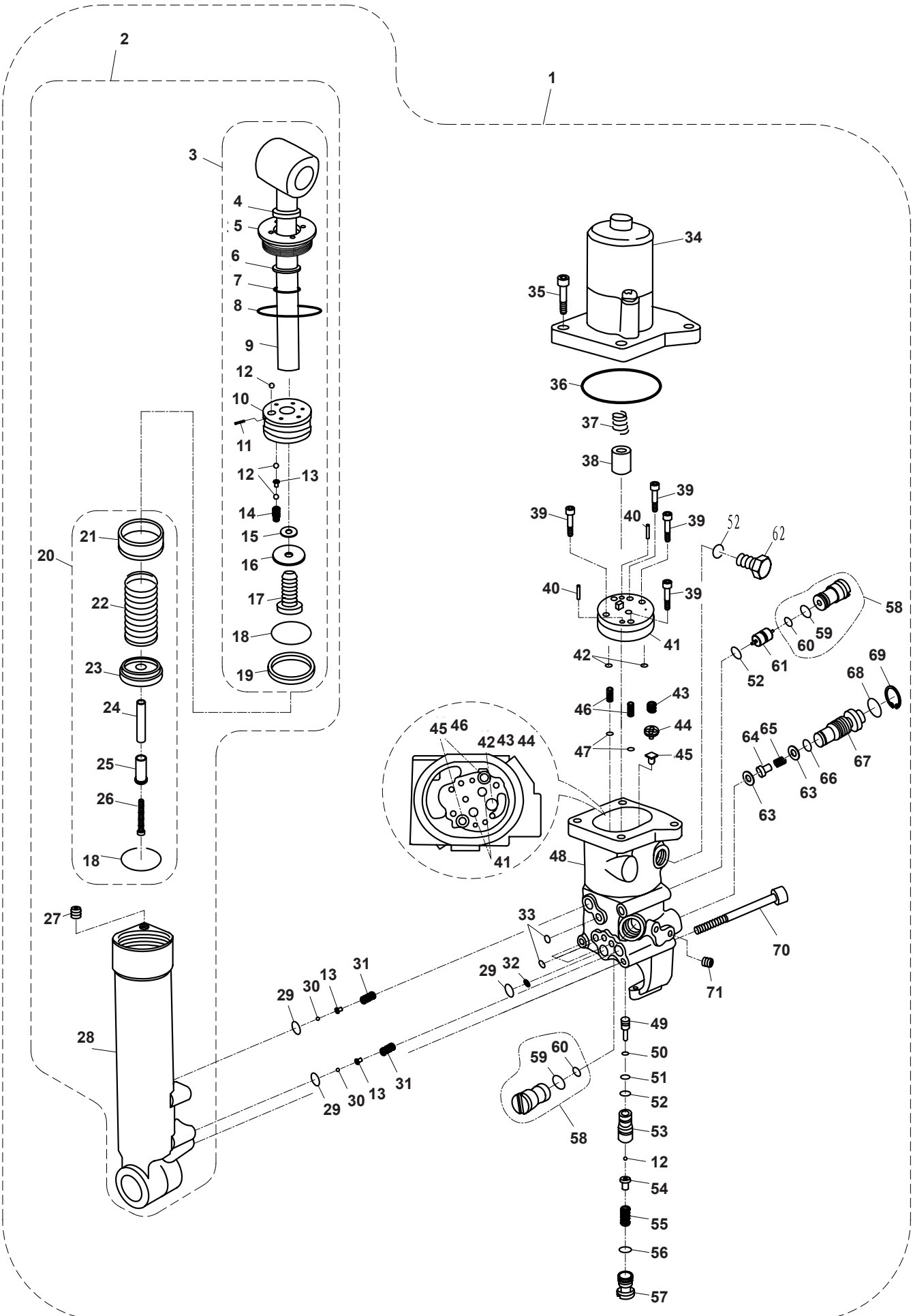

RECAMBIOS MARINOS S.L.

BOAT-parts.se

CIRCUITO COMBUSTIBLE / FUEL COMMON RAIL / CIRCUITO DI CARBURANTE

Nº	Ref.	Description	Quanty
1	**PAF40-05000046EI**	BOLT, ADAPTER	1
2	**PAGB/T982-12**	COMPOUND SEAL WASHER 12	2
3	**PAF40-05000045EI**	ADAPTER, COMMON RAIL	1
4	**PAGB/T70.1-M6x35**	INNER HEXAGON BOLT M6x35	2
5	**PAF40-05000044EI**	BUSHING, COMMON RAIL	2
6	**PAF40-05091200EI**	COMMON RAIL, FUEL OIL	1
7	**PAF40-05090300EI**	FUEL INJECTOR	3
8	**PAF15-07010004**	PLUG SCREW 1/8	1
9	**PAS7133-13.3**	SINGLE LUG CLAMP	4
10	**PAF40-05000021EI**	SHAPED TUBE, FUEL OIL	1
11	**PAF40-05000040EI**	JOINT A, FUEL FILTER	1
12	**PAF40-05091100EI**	FUEL FILTER	1
13	**PAF25-07150301W**	RELAY JACKET	1
14	**PAF40-05000041EI**	JOINT B, FUEL FILTER	1
15	**PAF40-05000019EI**	FUEL PIPE A Ø5xØ10x710	1
16	**PAF40-05100511EI**	OIL PIPE, OIL PUMP	1
17	**PAF40-05000052EI**	WATER PIPE G Ø6xØ11x550	1

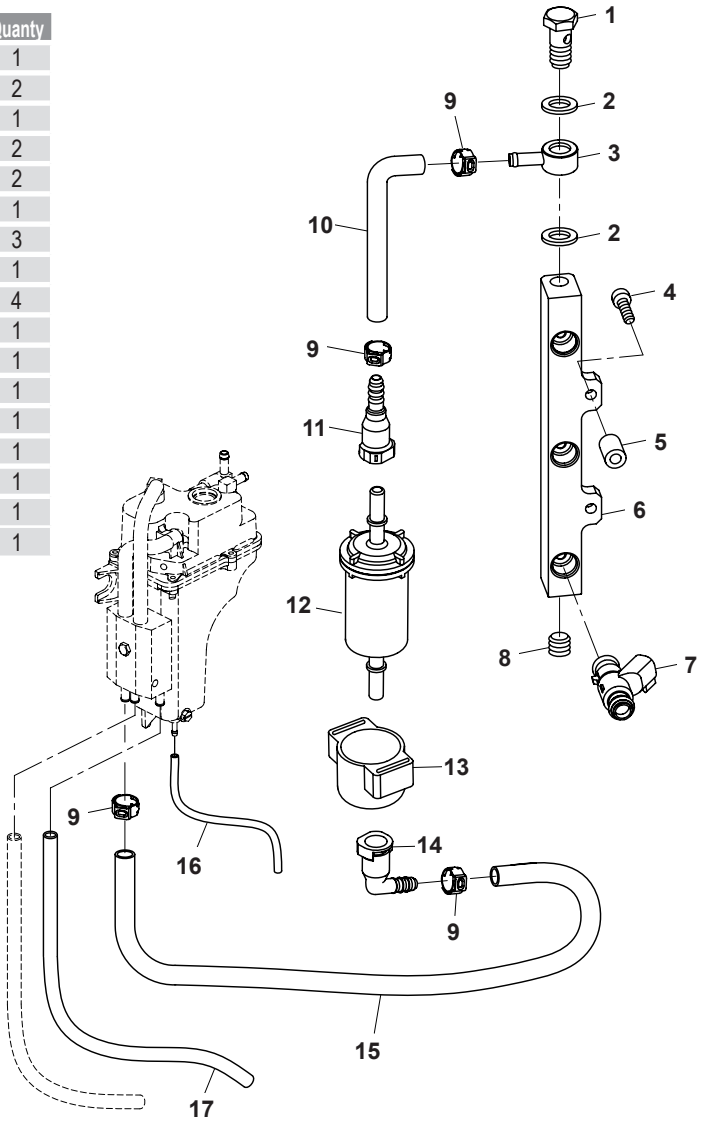

BOAT-parts.se



F60FWL-T / F50FWL-T

TAPA MOTOR / TOP COWLING ASSY / CALANDRA

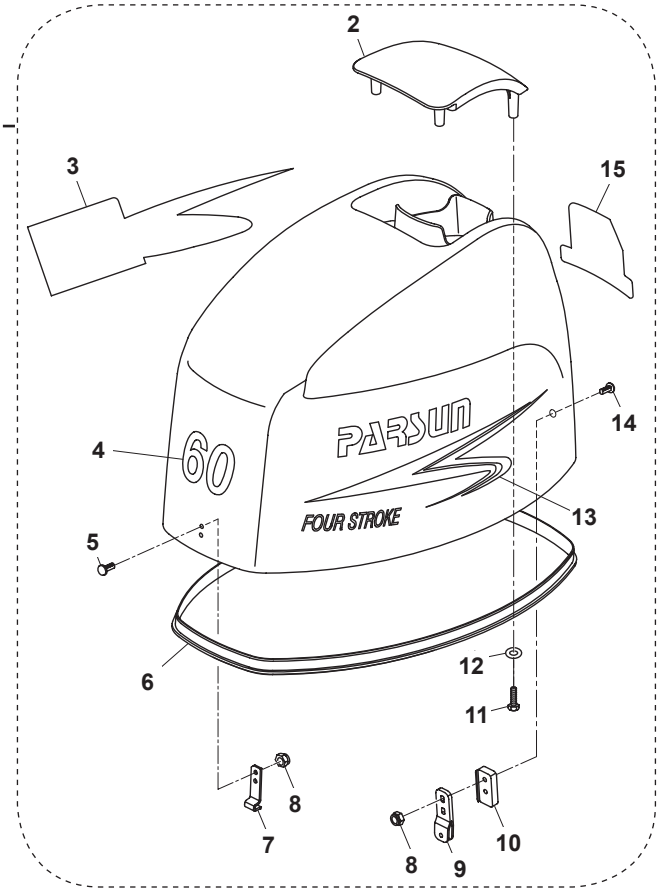

Nº	Ref.	Description	Quanty
1	**PAF60-07000000**	TOP COWLLING ASSY	1
2	**PAF60-07000003**	COVER, TOP COWLING	1
3	**PAF40-08000002**	MARK (RIGHT), TOP COWLING	1
4	**PAF60-08000005**	MARK (FRONT), TOP COWLING	1
5	**PAF25-06000006**	FLAT BOLT "B"	2
6	**PAF60-07000002**	RUBBER SEAL, TOP COWLING	1
7	**PAF25-06000004**	POTHOOK, FRONT	1
8	**PAGB/T889.1-M6**	LOCK NUT M6	4
9	**PAF25-06000100**	BACK POTHOOK ASSY	1
10	**PAF60-07000004**	SPACER, BACK POTHOOK ASSY	1
11	**PAGB/T5783-M6x20**	HEXAGON BOLT M6X20	4
12	**PAGB/T97.1-6**	WASHER, PLAIN 6	4
13	**PAF40-08000001**	MARK (LEFT), TOP COWLING	1
14	**PAF40-06000007**	FLAT BOLT "A"	2
15	**PAF40-08000003**	MARK (BACK), TOP COWLING	1

VARILLA ENLACE / LINK ROD / ASTICELLA DI UNIONE

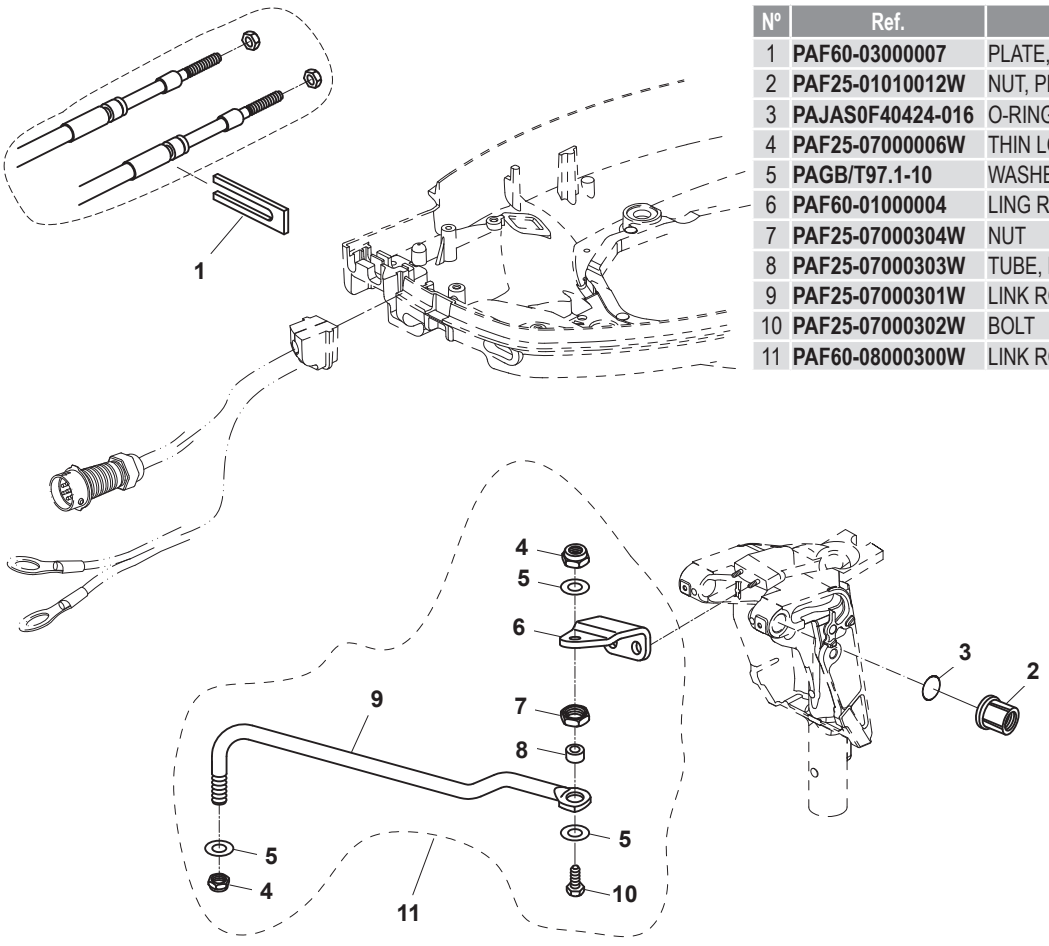

Nº	Ref.	Description	Quanty
1	**PAF60-03000007**	PLATE, RINGENT	1
2	**PAF25-01010012W**	NUT, PLASTIC	1
3	**PAJAS0F40424-016**	O-RING	1
4	**PAF25-07000006W**	THIN LOCKNUT	1
5	**PAGB/T97.1-10**	WASHER 10	2
6	**PAF60-01000004**	LING ROD	3
7	**PAF25-07000304W**	NUT	1
8	**PAF25-07000303W**	TUBE, BOLT	1
9	**PAF25-07000301W**	LINK ROD, TURNING	1
10	**PAF25-07000302W**	BOLT	1
11	**PAF60-08000300W**	LINK ROD ASSY	1

BOAT-parts.se

BANDEJA MOTOR / BOTTON COWLING / BASE CALANDRA

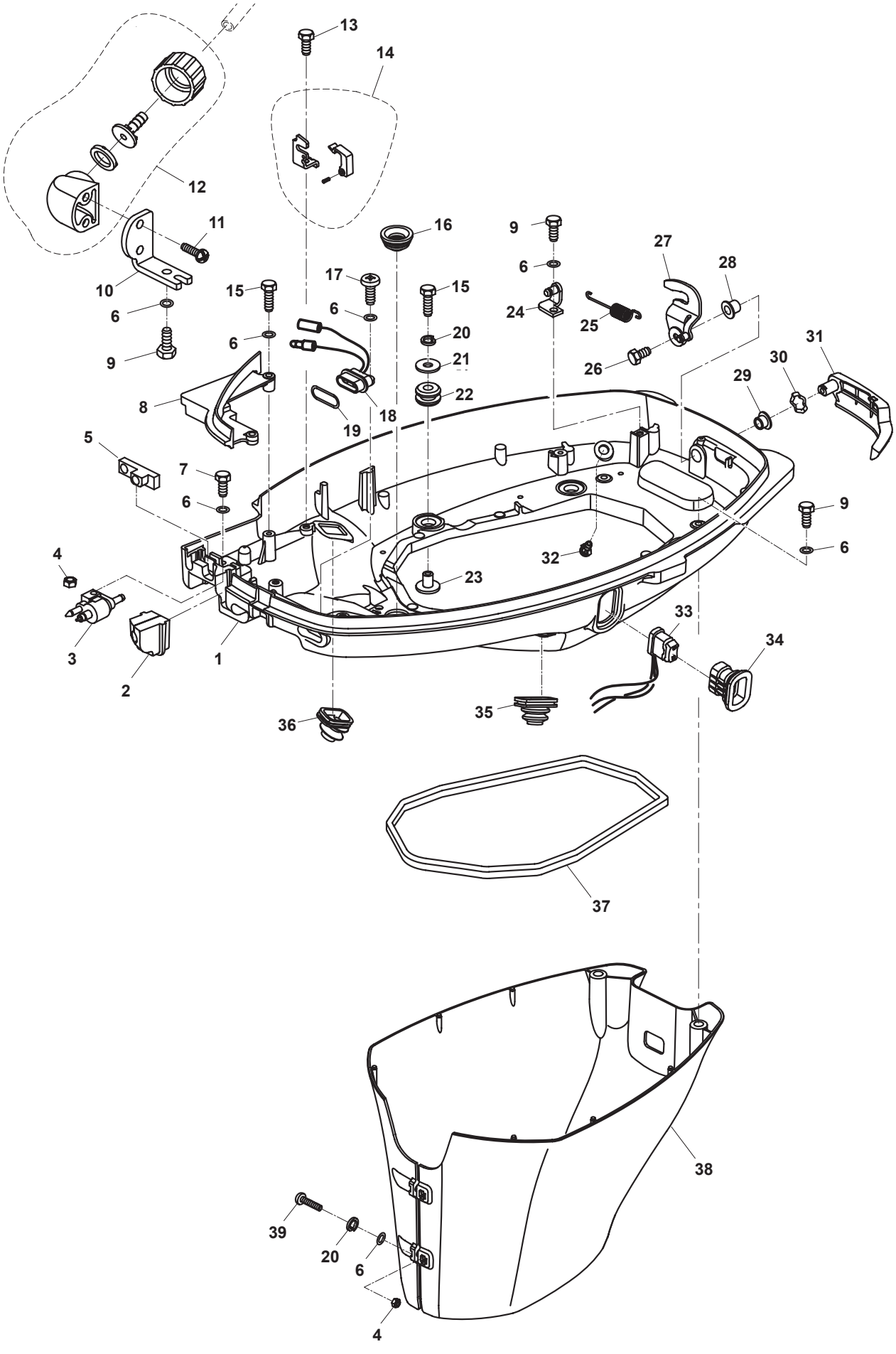

BOAT-parts.se

Nº	Ref.	Description	Quanty
1	**PAF60-03000001**	BOTTOM COWLLING	1
2	**PAF60-03000006FW**	RUBBER PLUG	1
3	**PAF4-05000200**	FUEL PIPE TIE-IN ASSY	1
4	**PAGB/T6170-M16**	NUT M6	3
5	**PAF60-03000005FW**	BAFFLE BOARD, RUBBER	1
6	**PAGB/T97.1-6**	WASHER, PLAIN 6	10
7	**PAGB/T5783-M16x25**	BOLT M6x25	1
8	**PAF60-03000003**	COVER BOARD, BOTTOM COWLING	1
9	**PAGB/T5783-M6x20**	HEXAGON BOLT M6X20	4
10	**PAF25-03000023W**	BRACKET, JAM	1
11	**PAGB/T845-ST5.5x19**	SCREW, PAN HEAD ST5.5X19	2
12	**PAF25-03000100W**	JAM ASSY	1
13	**PAGB/T5783-M6x14**	BOLT M6X14	1
14	**PAF60-03000300**	FIXED BRACKET ASSY, CABLE	1
15	**PAGB/T5783-M6x30**	BOLT HEXAGON M6X30	6
16	**PAF60-03000008**	SHEATH, WAVE	1
17	**PAGB/T823-M6x12**	SCREW M6x12	1
18	**PAF40-03000300EI**	PILOT LAMP ASSY	1
19	**PAF20-03000101**	SEAL, PILOT LAMP	1
20	**PAGB/T93-6**	WASHER, SPRING 6	6

Nº	Ref.	Description	Quanty
21	**PAF25-00000004**	BIG WASHER 6	4
22	**PAF25-03000006**	DAMPER	4
23	**PAF25-03000007**	BUSHING, DAMPER	4
24	**PAF25-03000019**	BRACKET ASSY, TENSIONAL SPRING	1
25	**PAF15-05000026**	SPRING, TENSION	1
26	**PAGB/T5783-M6x12**	BOLT, HEXAGON M6X12	1
27	**PAF25-03020000**	LOCKING ASSY, TOP COWLING	1
28	**PAF15-05000036**	BUSHING B	1
29	**PAF15-05000022**	BUSHING A	1
30	**PAF15-05000023**	WASHER, WAVE	1
31	**PAF60-03000100**	LOCKING HANDLE, TOP COWLING	1
32	**PAF15-05000009**	NIPPLE, PLASTIC	1
33	**PAF40-03000600W**	SWITCH ASSY, TILT	1
34	**PAF40-03000008**	JACKET, TILT SWITCH	1
35	**PAT85-03000004**	JACKET, BATTERY LINE	1
36	**PAF25-03000022W**	JACKET, WATER PIPE	1
37	**PAF25-03000002**	SEAL, BOTTOM COWLING	1
38	**PAF60-00000014**	COVER, UPPER CASING	1
39	**PAGB/T818-M6x25**	SCREW, PAN HEAD M6X25	2

COLA SUPERIOR / UPPER CASING / PARTE ALTA PIEDE

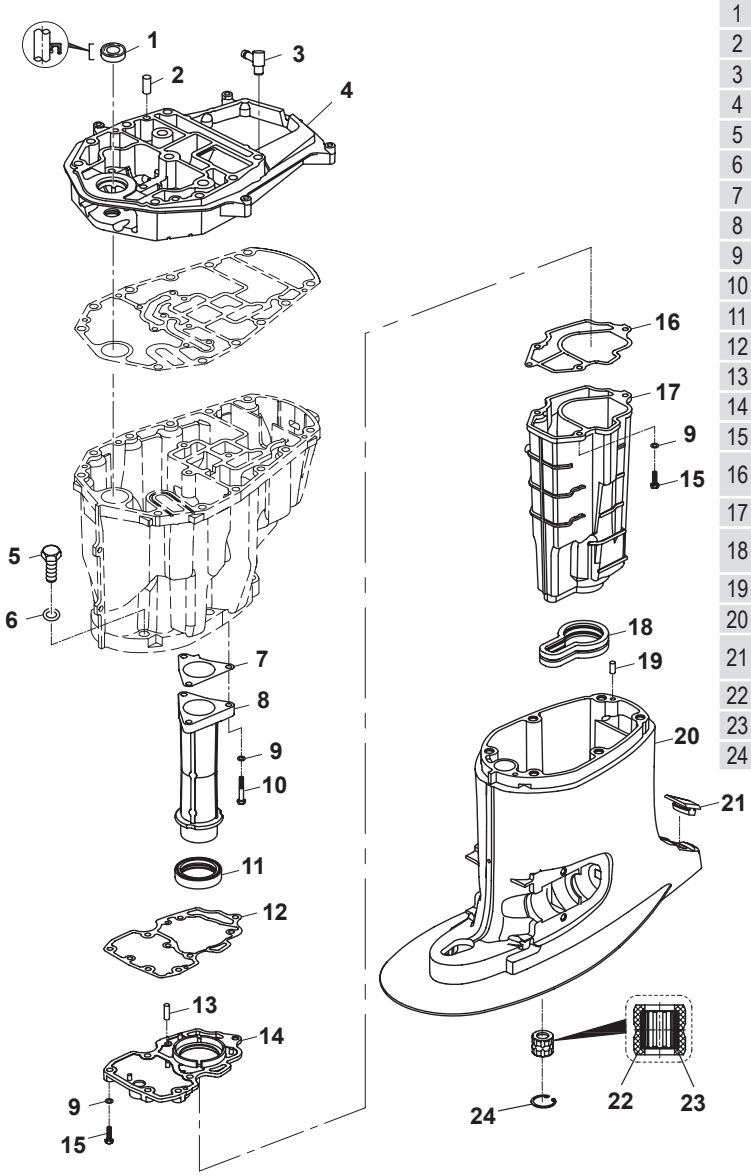

Nº	Ref.	Description	Quanty
1	**PAF60-02010002**	OIL SEAL 18x32x9	1
2	**PAF25-00000014**	PIN, DOWEL	2
3	**PAF15-04000005**	WATER NOZZLE	1
4	**PAF60-02010001**	SEAT, EXHAUST MANIFOLD	1
5	**PAT85-00000012**	BOLT M10x1.25x45	6
6	**PAGB/T97.1-10**	WASHER 10	6
7	**PAF60-02000013**	GAST, EXHAUST PIPE	1
8	**PAF60-02010007**	EXHAUST GUIDE PIPE	1
9	**PAGB/T97.1-6**	WASHER, PLAIN 6	9
10	**PAGB/T5782-M16x65**	NUT M6x65	3
11	**PAF60-02010012**	GASKET, EXHAUST PIPE	1
12	**PAF60-02010008**	GASKET, EXHAUST PLATE	1
13	**PAF25-04000007**	PIN, DOWEL	2
14	**PAF60-02010009**	EXHAUST PLATE	1
15	**PAGB/T5783-M16x25**	NUT M6x25	6
16	**PAF60-02010010**	LOWER GASKET, EXHAUST PLATE	1
17	**PAF60-02010011**	EXHAUST MANIFOLD	1
18	**PAF60-02000008**	GASKET, EXHAUST MANIFOLD	1
19	**PAF15-00000006**	PIN, DOWEL	2
20	**PAF60-02000001**	UPPER CASING	1
21	**PAF40-00000002**	RUBBER PLUG, UPPER CASING	1
22	**PAT36-02000006**	RUBBER BUSHING	1
23	**PAF60-02000003**	BUSHING, DRIVER SHAFT	1
24	**PAGB/T893.1-36**	CIRCLIP 36	1

RECAMBIOS MARINOS S.L.
BOAT-parts.se

CAMBIO / CONTROL SYSTEM / CALANDRA

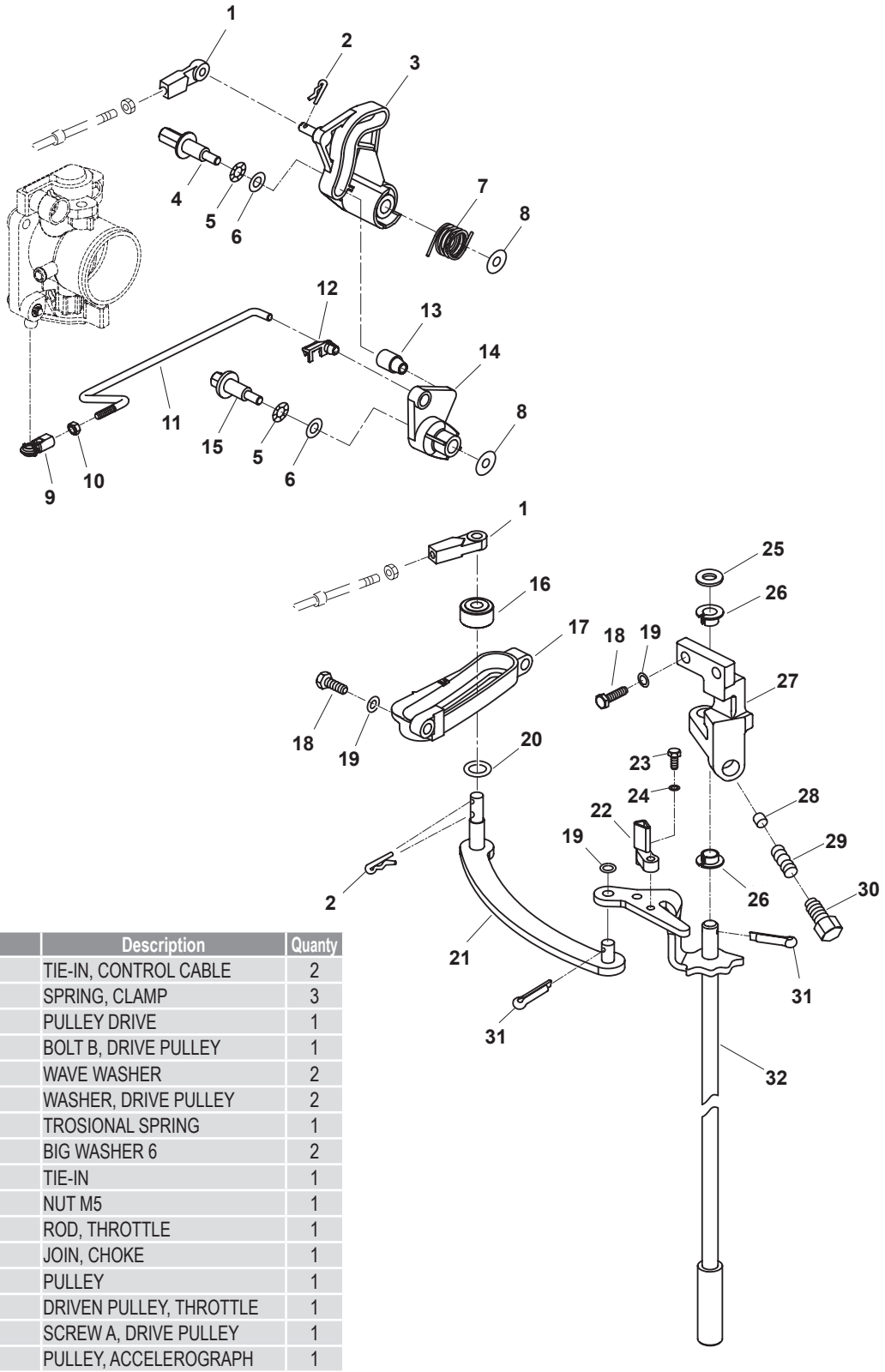

Nº	Ref.	Description	Quanty
1	**PAF25-07000005W**	TIE-IN, CONTROL CABLE	2
2	**PAF15-00000012**	SPRING, CLAMP	3
3	**PAF60-05000012**	PULLEY DRIVE	1
4	**PAF60-05000014-2**	BOLT B, DRIVE PULLEY	1
5	**PAF15-00000019**	WAVE WASHER	2
6	**PAF60-05000015**	WASHER, DRIVE PULLEY	2
7	**PAF60-05000013**	TROSIONAL SPRING	1
8	**PAJB/T96-6**	BIG WASHER 6	2
9	**PAF15-04040005**	TIE-IN	1
10	**PAGB/T6170-M5**	NUT M5	1
11	**PAF60-05000020**	ROD, THROTTLE	1
12	**PAF15-07130314W**	JOIN, CHOKE	1
13	**PAF60-05000018**	PULLEY	1
14	**PAF60-05000017**	DRIVEN PULLEY, THROTTLE	1
15	**PAF60-05000014-1**	SCREW A, DRIVE PULLEY	1
16	**PAT85-00010010**	PULLEY, ACCELEROGRAPH	1
17	**PAF60-00000008**	BRACKET, ACCELEROGRAPH	1
18	**PAGB/T5783-M6x20**	HEXAGON BOLT M6X20	4
19	**PAGB/T97.1-6**	WASHER, PLAIN 6	5
20	**PAT85-00010008**	WASHER, NYLON	1
21	**PAF60-00000300**	ACCELEROGRAPH BAR ASSY	1
22	**PAF60-00000006**	ROCKER, INCHING SWITCH	1
23	**PAGB/T5783-M5x14**	BOLT M5x14	1
24	**PAGB/T97.1-5**	WASHER 5	1
25	**PAGB/T848-10**	SMALL WASHER 10	1

Nº	Ref.	Description	Quanty
26	**PAF60-00000205**	BUSH, SHIFT ROD	2
27	**PAF60-00000204**	BRACKET, SHIFT ROD	1
28	**PAT20-03000006**	PLUNGER, SHIFT CAM	1
29	**PAT60-00010003**	SPRING PLUNGER	1
30	**PAF60-00000009**	SPRING PLUNGER	1
31	**PAGB/T91-02x16**	PIN 2x16	2
32	**PAF60-00000200**	CONNECTING ROD, SHIFTING	1

BOAT-parts.se

BLOQUE / CRANKCASE / BLOCCO

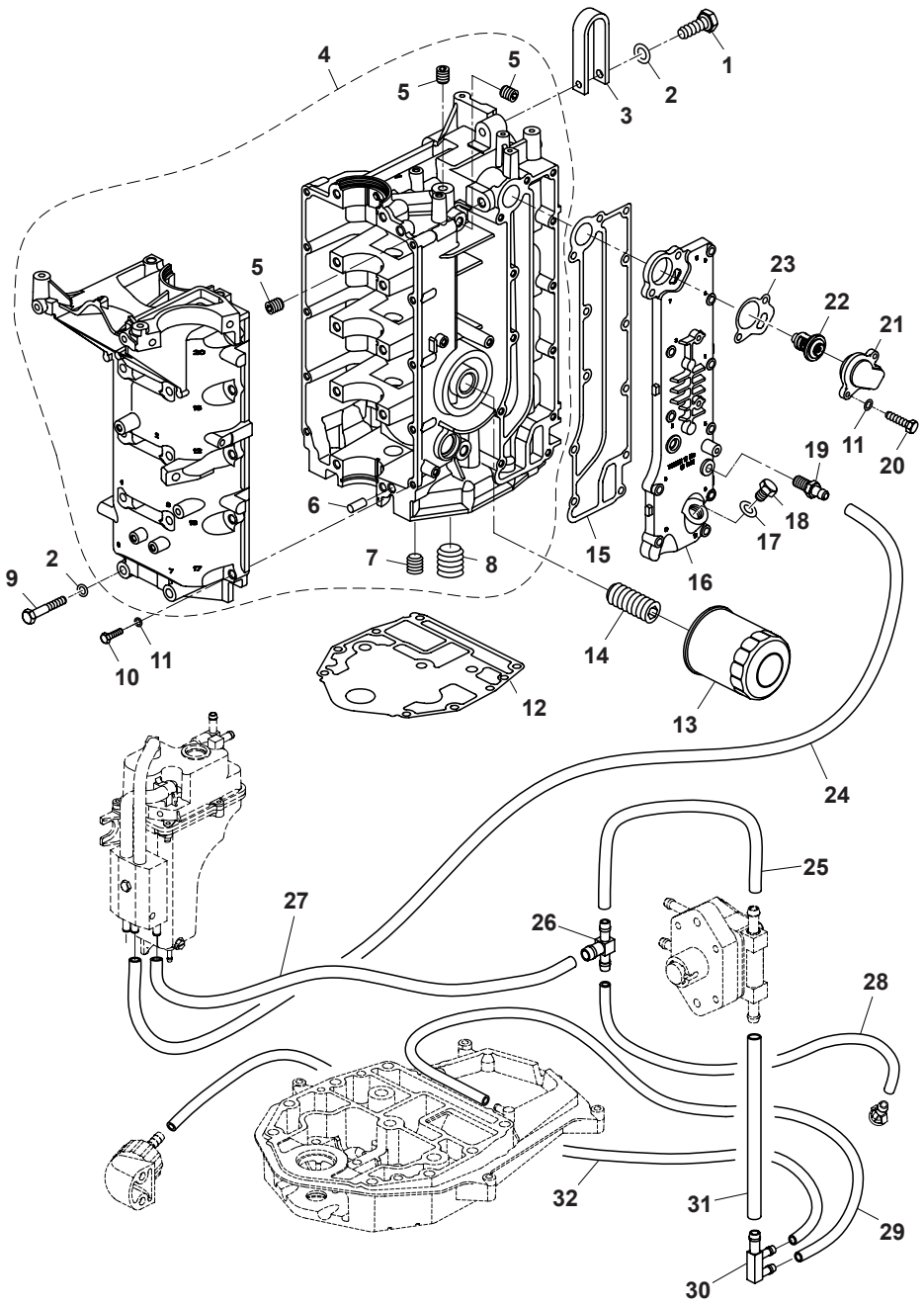

Nº	Ref.	Description	Quanty
1	**PAGB/T5782-M8x35**	BOLT, HEXAGON M8X35	1
2	**PAGB/T97.1-8**	WASHER 8	11
3	**PAF25-05010106**	HANGER,ENGINE	1
4	**PAF60-05010000**	CRANK CASE ASSY	1
5	**PAF15-07010004**	BLOCK, CYLINDER 1/8"	3
6	**PAF25-00000014**	PIN, DOWEL	2
7	**PAF25-05010104**	JAM 1/2"	1
8	**PAF25-05010103**	JAM 3/4"	1
9	**PAF25-05000035**	BOLT M8x80	10
10	**PAF15-07000030**	BOLT M6x35	10
11	**PAGB/T97.1-6**	WASHER, PLAIN 6	22
12	**PAF40-00000003**	GASKET, ENGINE	1
13	**PAF25-05000100**	OIL CLEANER	1
14	**PAF15-07010003**	BOLT, UNION	1
15	**PAF60-05000004**	GASKET, EXHAUST COVER	1
16	**PAF60-05000005**	EXHUST COVER	1
17	**PAF40-05000038**	GASKET, JAM	1

Nº	Ref.	Description	Quanty
18	**PAF40-05000037**	JAM M18x1.5	1
19	**PAF25-05010113**	NIPPLE, HOSE	1
20	**PAGB/T5782-M6x35**	BOLT M6X35	12
21	**PAF15-07010021**	COVER, THERMOSTAT	1
22	**PAF15-07000031**	THERMOSTAT	1
23	**PAF15-07010022**	GASKET, THERMOSTAT	1
24	**PAF60-05000028**	WATER PIPE B 6x11x330	1
25	**PAF60-05000047**	WATER PIPE	1
26	**PAF40-03000016**	TWO WAY	1
27	**PAF60-05000026**	WATER PIPE A 6x10x500	1
28	**PAF60-05000030**	WATER PIPE C 5x10x250	1
29	**PAF60-05000037**	WATER PIPE D 5x10x500	1
30	**PAF60-05000050**	F THREE WAY	1
31	**PAF60-05000040**	WATER PIPE F 6x10x100	1
32	**PAF60-05000032**	WATER PIPE	1

RECAMBIOS MARINOS S.L.

BOAT-parts.se

CULATA / CYLINDER HEAD / TESTATA

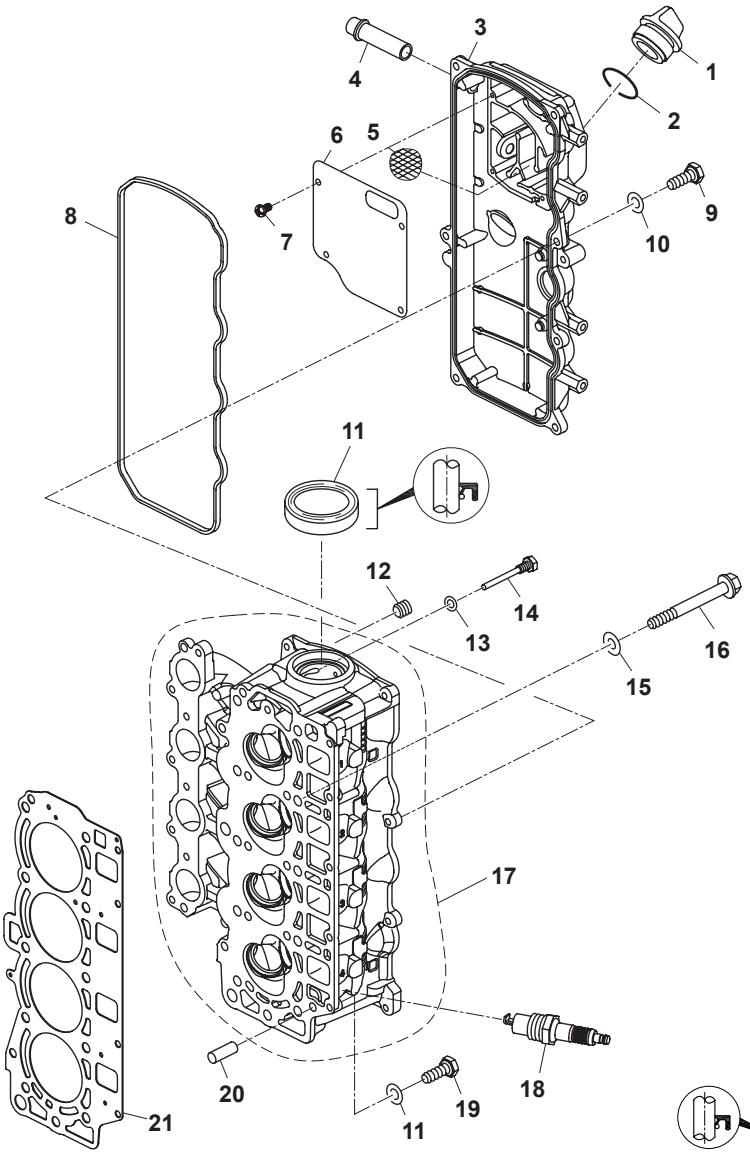

Nº	Ref.	Description	Quanty
1	PAF15-07050004	PLUG,OIL	1
2	PAASOF40435025	O RING, OIL PLUG	1
3	PAF60-05030001	COVER, CYLINDER HEAD	1
4	PAF40-5070042	CONNECTOR, BREATHER	1
5	PAF25-05010107	CLEANER	1
6	PAF60-05030002	COVER, BREATHER	1
7	PAGB/T818-M4x10	SCREW,PAN HEAD M4X10	4
8	PAF60-05000003	SEAL, CYLINDER HEAD COVER	1
9	PAGB/T5783-H16x20	BOLT M6x20	7
10	PAGB/T97.1-6	WASHER, PLAIN 6	11
11	PAF25-05050021	OIL SEAL	1
12	PAF15-07010005	PLUG 1/4	8
13	PAF25-05050007	GASKET	1
14	PAF25-05050006	BOLT	1
15	PAF25-05000003	WASHER, PLATE	10
16	PAF25-05000002	BOLT, FLANGE	10
17	PAF60-05020100	CYLINDER HEAD ASSY	1
18	NGKDPR7EA-9	SPARK PLUG DPR7EA-9	4
19	PAF8-05000022	BOLT M6x25	5
20	PAF25-00000014	PIN, DOWEL	2
21	PAF60-05000100	CYLINDER GASKET	1

CIGÜEÑAL Y PISTONES
CRANKSHAFT & PISTON
ALBERO MOTORE E PISITONE

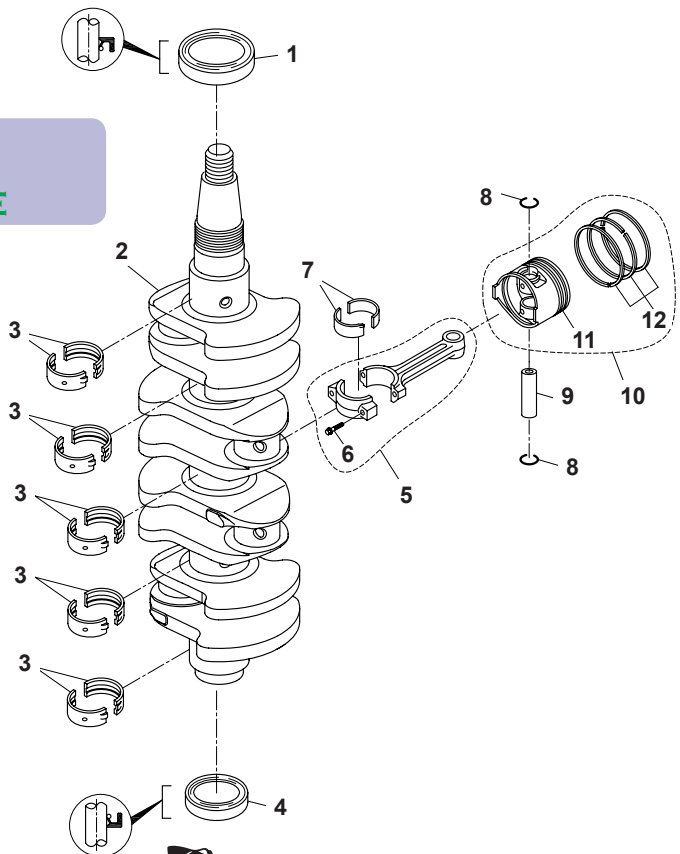

Nº	Ref.	Description	Quanty
1	PAF25-05020003	OIL SEAL B	1
2	PAF60-05000001	CRANK SHAFT	1
3	PAF25-05010302-1	MAIN BEARING	10
3	PAF25-05010302-2	MAIN BEARING	10
4	PAF25-05020002	OIL SEAL A	1
5	PAF25-05020200	ROD, CONNECTING	4
6	PAF25-05020204	BOLT, CONNECTING ROD	8
7	PAF25-05020203-1	PLANE BEARING, CONNECTING ROD (BLACK)	8
7	PAF25-05020203-2	PLANE BEARING, CONNECTING ROD (BROWN)	8
8	PAF25-05020106	CIRCLIP	8
9	PAF25-05020105	PIN, PISTON	4
10	PAF40-05020100	PISTON ASSY	4
11	PAF40-05020101	PISTON	4
12	PAF25-05020102	PISTON RING ASSY	4

BOAT-parts.se

BOMBA COMBUSTIBLE / FUEL SYSTEM / POMPA BENZINA

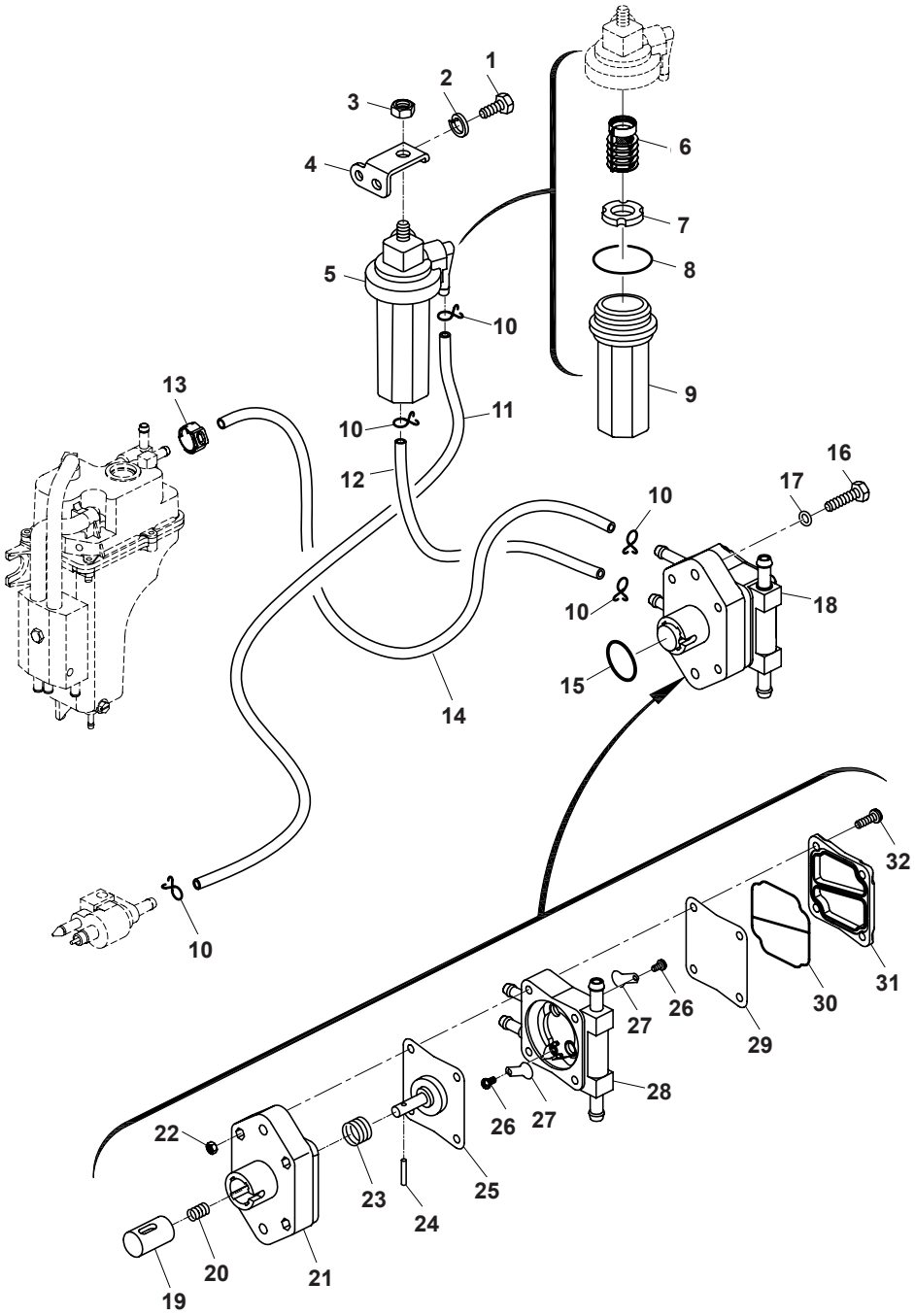

Nº	Ref.	Description	Quanty
1	**PAGB/T5783-M16x14**	BOLT M6x14	1
2	**PAGB/T93-6**	WASHER, SPRING 6	1
3	**PAGB/T6170-M18**	NUT M8	1
4	**PAF40-05000036**	BRACKET, FILTER CUP	1
5	**PAT85-05000300**	FILTER CUP ASSY	1
6	**PAF15-07080001**	ELEMENT, FILTER	1
7	**PAT85-05000302**	F10ATER	1
8	**PAGB/T3452.1-32.5x1.8**	WASHER, CUP FILTER Ø32.5x1.8	1
9	**PAT85-05000301**	CUP, FILTER	1
10	**PAF4-04000030**	SPRING, FUEL PIPE"B"	6
11	**PAF60-03000012**	FUEL PIPE A 5x10x650 (EPA)	1
12	**PAF60-05000051EI**	FUEL PIPE (EPA)	1
13	**PAS7133-13.3**	SINGLE LUG CLAMP	1
14	**PAF60-05000006**	FUEL PIPE B 6x12.5x730 (EPA)	1
15	**PAGB/T3452.1-25x3.0**	O-RING 25x3.0	1
16	**PAGB/T5783-M16x30**	BOLT M6x30	2

Nº	Ref.	Description	Quanty
17	**PAGB/T97.1-6**	WASHER, PLAIN 6	2
18	**PAF40-05050000**	FUEL PUMP ASSY	1
19	**PAF25-05130004**	PLUNGER	1
20	**PAF25-05130003**	SPRING, PLUNGER	1
21	**PAF25-05130001**	SEAT, FUEL PUMP	1
22	**PAGB/T6170-M15**	NUT M5	4
23	**PAF25-05130002**	SPRING, DIAPHRAGM	1
24	**PAF25-05130008**	ROLLER NEEDLE 4x16.5	1
25	**PAF25-05130100**	DIAP HRAGM ASSY	1
26	**PAF4-04090011**	SCREW, VALVE	2
27	**PAF4-04090005**	PLATE	2
28	**PAF40-05050200**	FUEL PUMP SHELL ASSY	1
29	**PAF25-05130005**	DIAPHRAGM, TOP	1
30	**PAF25-05130006**	SEAL, FUEL PUMP	1
31	**PAF25-05130007**	COVER, FUEL PUMP	1
32	**PAGB/T818-M5x40**	SCREW M5x40	4

RECAMBIOS MARINOS S.L.

BOAT-parts.se

SOPORTE MOTOR / BRACKET / SUPPORTO MOTORE

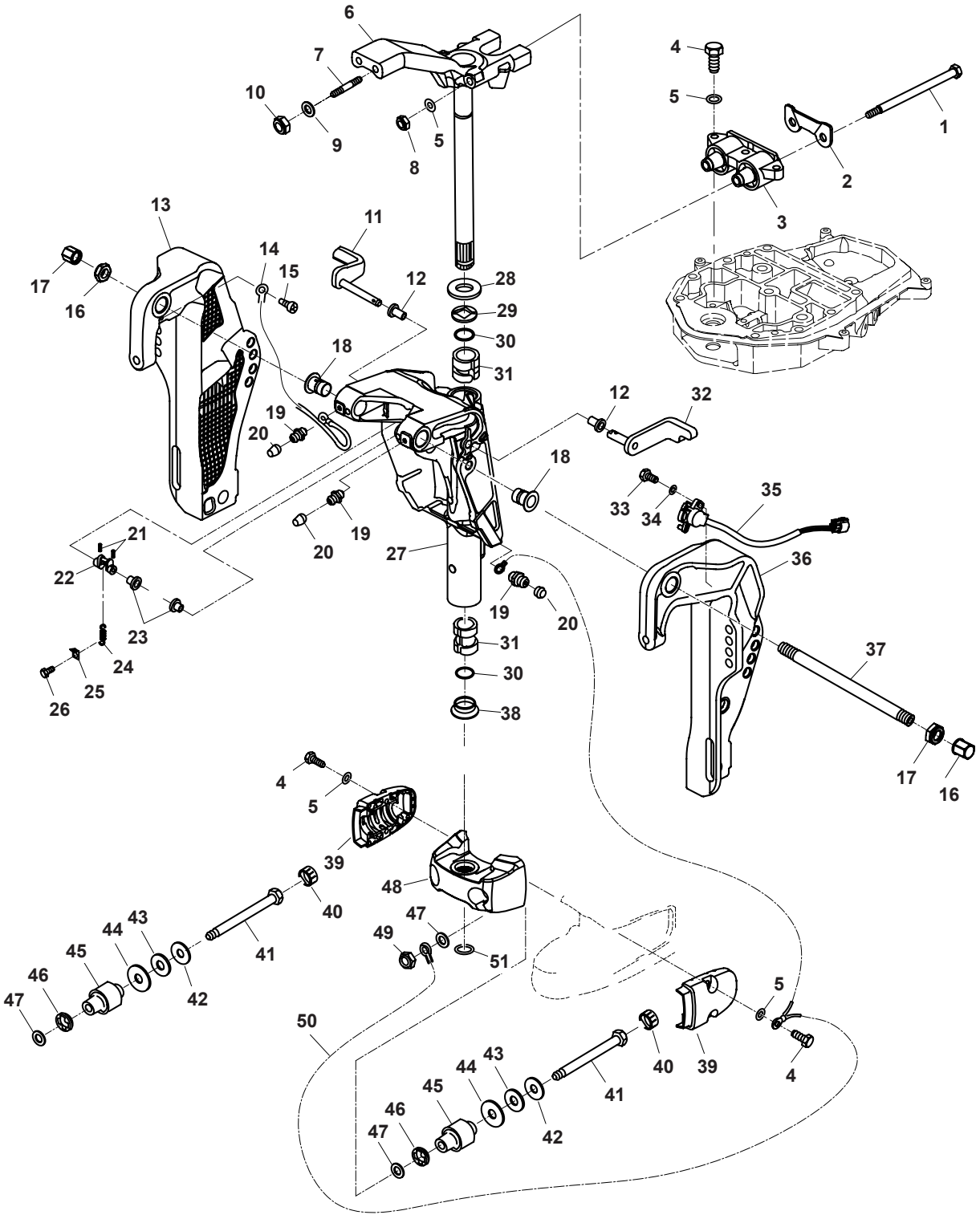

Nº	Ref.	Description	Quanty
1	**PAF60-02000011**	LONG BOLT	2
2	**PAF60-02000010**	PLATE, ABSORBER	1
3	**PAF60-02020000**	SHOCK ABSORBER ASSY, DOUBLE HOLE	1
4	**PAGB/T5783-M8x30**	BOLT M8X30	7
5	**PAGB/T97.1-8**	WASHER 8	9
6	**PAF60-01020000**	BRACKET, ASSY	1
7	**PAT85-01020008**	BOLT M10x1.25x28	2
8	**PAGB/T889.1-M18x1.25**	LOCK NUT M8x1.25	2
9	**PAGB/T97.1-10**	WASHER 10	2

Nº	Ref.	Description	Quanty
10	**PAGB/T889.2-M110x1.25**	LOCK NUT M110x1.25	2
11	**PAF60-01010104**	SUPPORTING ASSY B	1
12	**PAT85-01010203**	BUSH, NYLON	2
13	**PAF60-01010002**	BRACKET, CLAMP (RIGHT)	1
14	**PAT85-01010003**	WIRE, LEAD A	1
15	**PAGB/T818-M6x10**	SCREW, PAN HEAD M6X10	1
16	**PAF15-01010007**	NUT, SELF-LOCKING	2
17	**PAF25-01010011**	NUT, PLASTIC	2
18	**PAF60-01010004**	BUSH, NYLON	2

BOAT-parts.se

Nº	Ref.	Description	Quanty
19	**PAJB/T7940.1-M6**	NIPPLE, GREASE	3
20	**PAT85-01010210**	CAP, GREASE NIPPLE	3
21	**PAGB/T879.2-3x16**	PIN, SPRING	2
22	**PAT85-01010206**	BAR ASSY, SUPPORT BRACKET	1
23	**PAF60-01010103**	BUSH, NYLON	2
24	**PAT85-01010207**	SPRING	1
25	**PAT85-01010208**	PLATE	1
26	**PAGB/T5783-M6x10**	BOLTM6X10	1
27	**PAF60-01010101**	BRACKET	1
28	**PAT85-01020002**	WASHER	1
29	**PAT85-01020003**	BUSH	1
30	**PAT85-01020004**	O-RING	2
31	**PAT85-01020005**	BUSH	2
32	**PAF60-01010102**	SUPPORTING ASSY A	1
33	**PAGB/T5783-M6x20**	HEXAGON BOLT M6X20	2
34	**PAGB/T97.1-6**	WASHER, PLAIN 6	2
35	**PAF60-01010200**	RAISE SENSOR ASSY	1

Nº	Ref.	Description	Quanty
36	**PAF60-01010001**	BRACKET, CLAMP (RIGHT)	1
37	**PAF60-01010003A**	DOUBLE-EDGED TUBE	1
38	**PAT85-01020006**	BUSH	1
39	**PAF60-00000005**	COVER, ABSORBER	2
40	**PAF60-00000004**	COVER, NUT	2
41	**PAF60-00000001**	SCREW, ABSORBER	2
42	**PAT85-00000002**	WASHER A	2
43	**PAT36-02020003**	WASHER, RUBBER	2
44	**PAF60-00000003**	PLATE	2
45	**PAF60-00000100**	ABSORBER ASSY (LEFT, RIGHT)	2
46	**PAF60-00000002**	WHASER, RUBBER	2
47	**PAT85-00000020**	WAHSER	4
48	**PAF60-01000001**	ABSORBER BLOCK	1
49	**PAGB/T6170-M12x1.25**	LOCK NUT	2
50	**PAF60-02000002**	TIGHTWIRE, EARTHING	1
51	**PAT85-01020010**	CIRCLIP	1

ADMISIÓN / INTAKE / ASPIRAZIONE

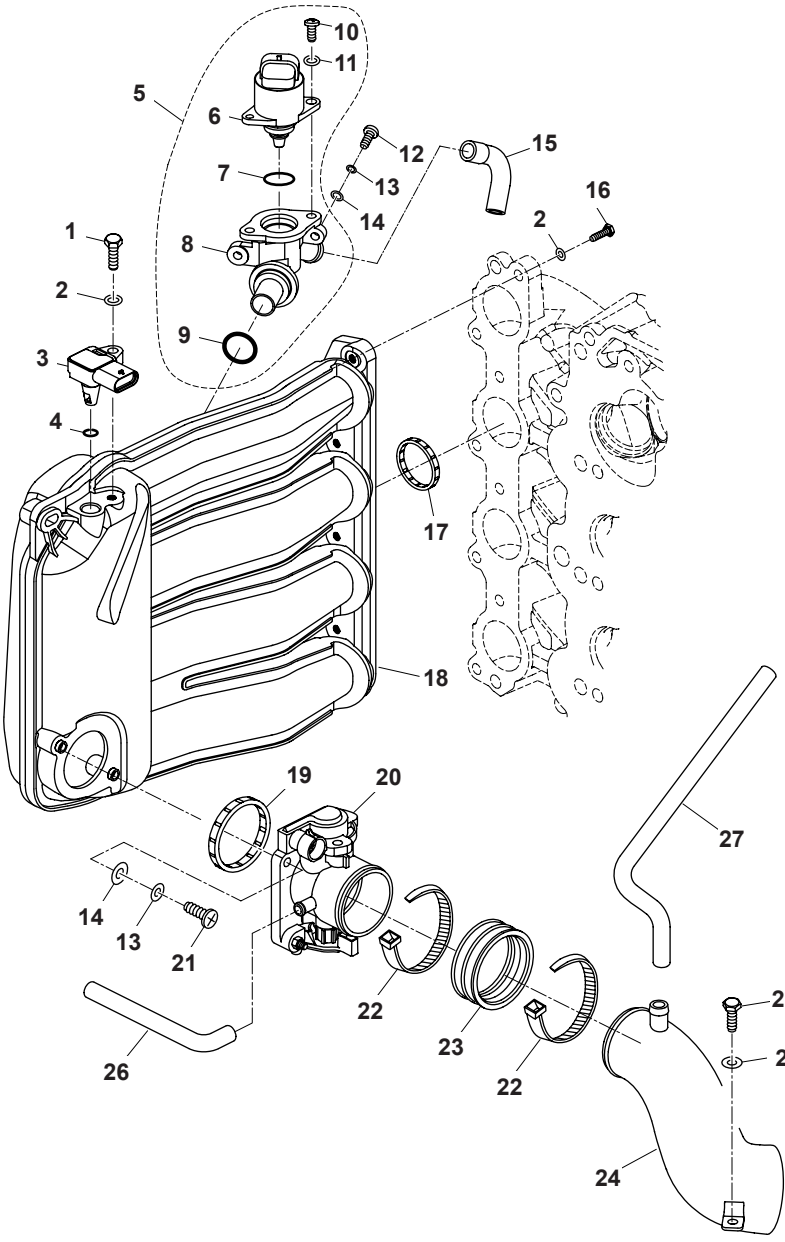

Nº	Ref.	Description	Quanty
1	**PAGB/T5783-M6x20**	HEXAGON BOLT M6X20	1
2	**PAGB/T97.1-6**	WASHER, PLAIN 6	9
3	**PAF40-05090600EI**	SENSOR, INTAKE TEMPERATURE	1
4	**PAF40-05090601EI**	O-RING, TEMPERATURE SENSOR	1
5	**PAF40-05090500EI**	CONTROL VALVE, IDLE	1
6	**PAF40-05090503EI**	STEP MOTOR	1
7	**PAF40-05090503-1EI**	O-RING, STEP MOTOR	1
8	**PAF40-05090501EI**	IDLE CONTROL	1
9	**PAF40-05090502EI**	O RING, IDLE VALVE	1
10	**PAGB/T818-M4x10**	SCREW, PAN HEAD M4X10	2
11	**PAGB/T97.1-4**	WASHER 4	2
12	**PAGB/T818-M5x14**	BOLT M5x14	2
13	**PAGB/T93-5**	SPRING WASHER 5	4
14	**PAGB/T97.1-5**	WASHER 5	4
15	**PAF40-05000026EI**	IDLE CONTROL PIPE	1
16	**PAGB/T5783-M6x25**	HEXAGON BOLT M6x25	6
17	**PAF40-05090803EI**	SEAL, INTAKE SILENCER	3
18	**PAF60-05001100**	INTAKE SILENCER	1
19	**PAF40-05090403EI**	SEAL, THROTTLE VALVE	1
20	**PAF40-05090400EI**	THROTTLE VALVE ASSY	1
21	**PAGB/T818-M5x20**	BOLT M5x20	2
22	**PAHT4.0x300**	CLAMP 4.0x300	2
23	**PAF40-05090408EI**	RUBBER BOOT, THROTTLE VALVE	1
24	**PAF60-05000043**	GUILD PIPE, THROTTLE	1
25	**PAGB/T5783-M6x16**	HEXAGON BOLT M6X16	1
26	**PAF60-05000011**	AIR PIPE A	1
27	**PAF60-05000048**	AIR PIPE	1

RECAMBIOS MARINOS S.L.
BOAT-parts.se

ELECTRICIDAD 1 / ELECTRICAL 1 / PARTE ELETTRICA 1

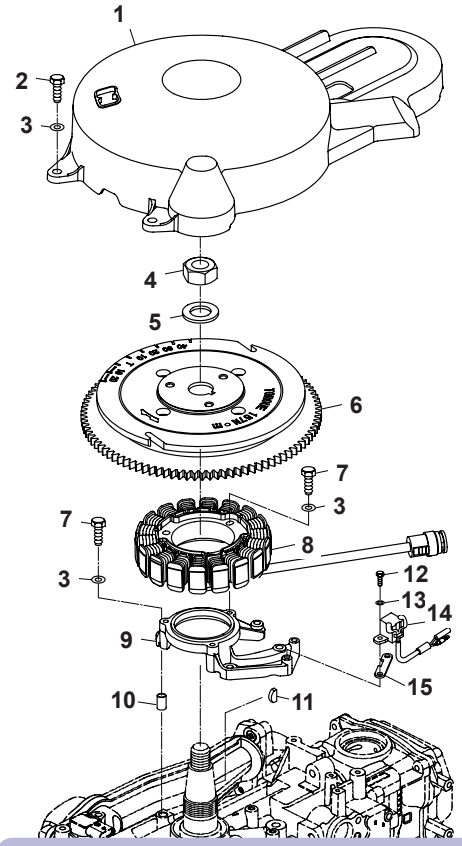

Nº	Ref.	Description	Quanty
1	PAF60-05000041	COVER, FLY WHEEL	1
2	PAGB/T5783-M6x20	HEXAGON BOLT M6X20	4
3	PAGB/T97.1-6	WASHER, PLAIN 6	11
4	PAF25-05000026	NUT	1
5	PAF25-05000025	WASHER, FLYWHEEL NUT	1
6	PAF60-05000300	FLY WHEEL	1
7	PAGB/T5783-M6x30	BOLT HEXAGON M6X30	7
8	PAF40-05000600EI	MAGNETO COIL ASSY	1
9	PAF40-05000034	BRACKBT, COIL	1
10	PAF8-00000005	DOWEL PIN Ø8x10	2
11	PAF25-05000024	KEY,SEMISIRCLE FLYWHEEL	1
12	PAGB/T5783-M5x12	BOLT M5X12	2
13	PAGB/T97.1-5	WASHER 5	2
14	PAF60-05000200	IMPULSE COIL ASSY	1
15	PAF60-05000052	PLATE, IMPULSE	1

ELECTRICIDAD 2
ELECTRICAL 2
PARTE ELETTRICA 2

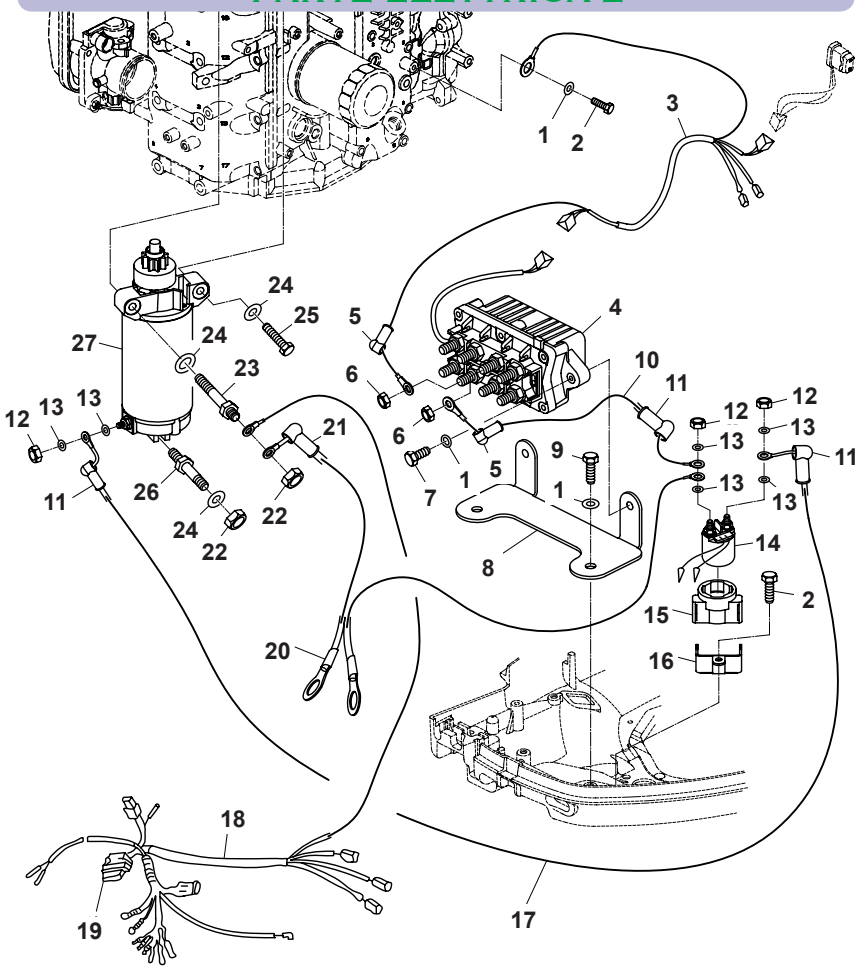

Nº	Ref.	Description	Quanty
1	PAGB/T97.1-6	WASHER, PLAIN 6	5
2	PAGB/T5783-M6X10	BOLTM6X10	2
3	PAF60-05000800	WIRING HARNESS, HYDRAULIC TILT	1
4	PAT85-05030200	RELAY ASSY	1
5	PAF15-07150501W	JACKET, POWER CONNECTING WIRE	2
6	PAGB/T6170-M6	NUT M6	2
7	PAGB/T5783-M6X20	HEXAGON BOLT M6X20	2
8	PAF40-03000013EI	FIXED BRACKET, TILT RELAY	1
9	PAGB/T5783-M6X12	BOLT, HEXAGON M6X12	2
10	PAT85-05030002	CONNECT LINE, RELAY	1
11	PAF25-05170202W	COVERING B, POWER SOURCE LINE	3
12	PAGB/T6170-IV16	NUT M6	3
13	PAGB/T97.1-6	WASHER, PLAIN 6	6
14	PAF15-07150300W	RELAY, MOTOR	1
15	PAF15-07150301W	JACKET, RELAY	1
16	PAT60-03000300W	RELAY BRACKET	1
17	PAT85-05000022	CONNECT LINE, ELECTROMOTOR	1
18	PAF60-05000900	WIRING HARNESS, ECU CONTROL	1
19	PAF40-05001000-1EI	FUSE WIRE (40A)	1
	PAF40-05001000-2EI	FUSE WIRE (20A)	1
	PAF40-05001000-3EI	FUSE WIRE (15A)	1
	PAF40-05001000-4EI	FUSE WIRE (7.5A)	1
20	PAT85-05000023	CONNECTION LINE, POWER	1
21	PAF25-05170201W	COVERING A, POWER SOURCE LINE	1
22	PAGB/T6170-M8	NUT M8	1
23	PAF25-05170001W	FIXATION BOLT,MOTOR	1
24	PAGB/T97.1-8	WASHER 8	3
25	PAGB/T5783-M8X45	BOLT M8x45	1
26	PAF60-05000042	SCREW, START MOTOR	1
27	PAF60-05000500	START MOTOR	1

BOAT-parts.se

ELECTRICIDAD 3 / ELECTRICAL 3 / PARTE ELETTRICA 3

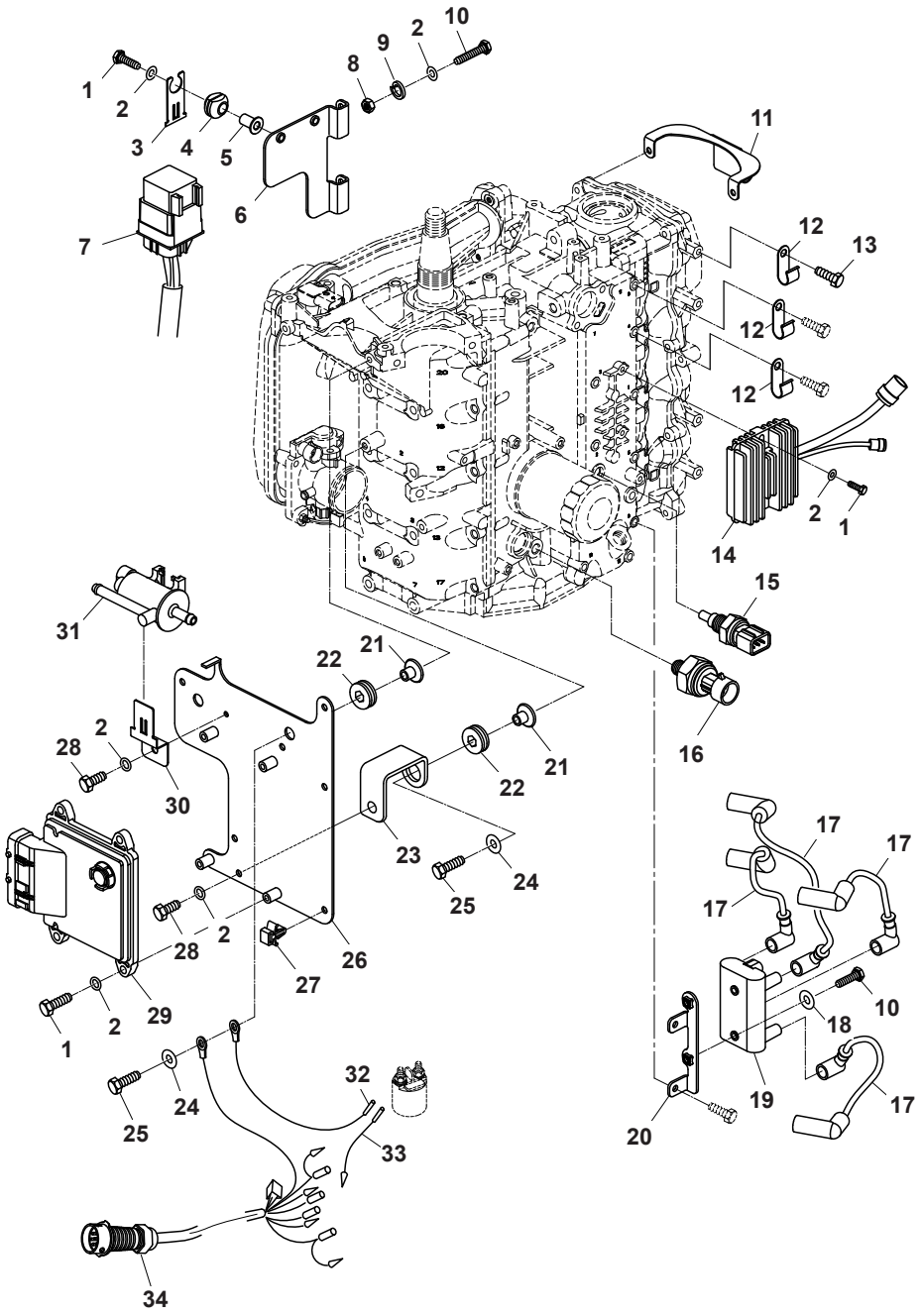

Nº	Ref.	Description	Quanty
1	**PAGB/T5783-M6x25**	HEXAGON BOLT M6x25	8
2	**PAGB/T97.1-6**	WASHER, PLAIN 6	12
3	**PAF40-05091401EI**	BRACKET, MAIN RELAY	2
4	**PAF40-05091402EI**	DAMPER, MAIN RELAY	2
5	**PAT40-05000028**	TUBE, IGNITER	2
6	**PAF40-05000060EI**	FIXED PLATE, MAIN RELAY	1
7	**PAF40-05091400EI**	MAIN RELAY	2
8	**PAGB/T6170-M6**	NUT M6	2
9	**PAGB/T93-6**	WASHER, SPRING 6	2
10	**PAGB/T5782-M6x35**	BOLT M6X35	2
11	**PAF40-05000059EI**	CLAMP C	4
12	**PAF40-05000003**	CLAMP	1
13	**PAGB/T5783-M6x10**	BOLTM6X10	3
14	**PAF40-05000500EI**	RECTIFIER ASSY	1
15	**PAF40-05090700EI**	SENSOR, WATER TEMPERATURE	1
16	**PAF40-05000042EI**	OIL PRESSURE SENSOR	1
17	**PAF60-05000601**	HIGH VOLTAGE WIRE	4

Nº	Ref.	Description	Quanty
18	**PAGB/T96-6**	LARGE WASHER 6	2
19	**PAF60-05000600**	IGNITION COIL	1
20	**PAF60-05000023**	FIXED PLATE, IGNITION COIL	1
21	**PAF15-07000021**	BUSHING, INTAKE SILENCER	3
22	**PAF8-05000007**	DAMPER	3
23	**PAF60-05000031**	FIXED PLATE	1
24	**PAFS-05000021**	BIG WASHER	3
25	**PAGB/T5783-M6x20**	HEXAGON BOLT M6X20	3
26	**PAF40-05000009-1EI**	FIXED PLATE, ECU	1
27	**PAHDB-6x1.5**	FIXED SEAT	4
28	**PAGB/T5783-M6x12**	BOLT, HEXAGON M6X12	2
29	**PAF60-05001000**	ECU UNIT	1
30	**PAF40-05000049EI**	FIXED PLATE, MAGNETIC VALVE	1
31	**PAF40-05091500EI**	MAGNETIC VALVE, CARBON POT	1
32	**PAF60-05000036**	CONNECT WIRE (BLACK), RELAY	1
33	**PAT85-05030003**	CONNECT WIRE (ROWN),RELAY	1
34	**PAF40-05030500EI**	C.D.I CABLE ASSY	1

RECAMBIOS MARINOS S.L.

BOAT-parts.se

COLA INFERIOR 1 / LOWER CASING & DRIVE 1 / PARTE INFERIORE PIEDE 1

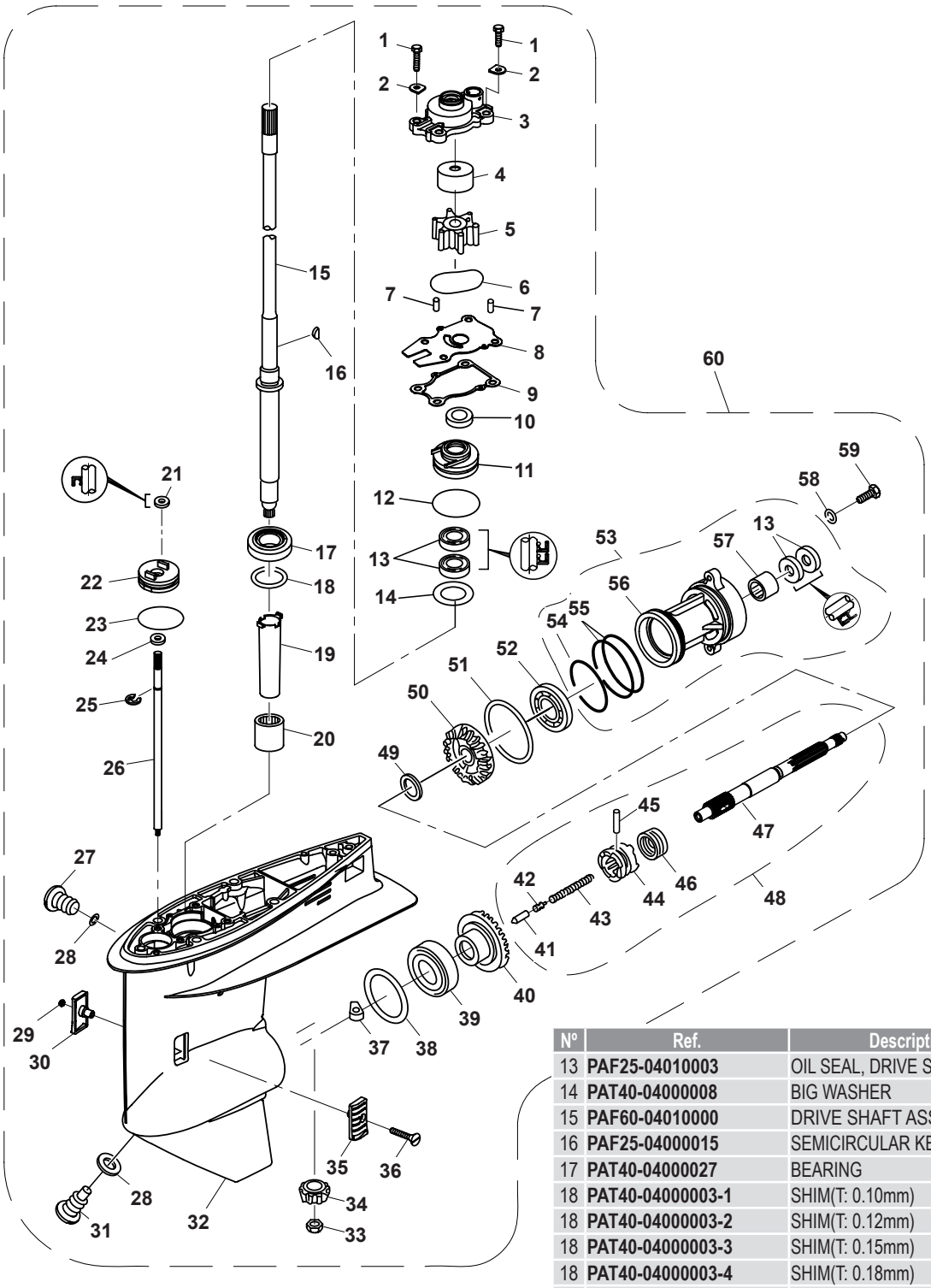

Nº	Ref.	Description	Quanty
1	PAGB/T5783-M8x30	BOLT M8X30	4
2	PAT40-04000012	PLATE, WATER PUMP	4
3	PAF60-04000401	WATER PUMP COVER	1
4	PAT40-04000202	INNER SHELL, WATER PUMP	1
5	PAF60-04000300	IMPELLER, WATER PUMP	1
6	PAT40-04000205	O-RING	1
7	PAF25-04000007	PIN, DOWEL	2
8	PAF60-04000009	OUTER PLATE	1
9	PAT40-04000010	GASKET, WATER PUMP SEAT	1
10	PAF60-04000008	COVER, OIL SEAL	1
11	PAT40-04040001	CASING A, OIL SEAL	1
12	PAJASOF40424-50	O RING, OIL SEAL CASING	1

Nº	Ref.	Description	Quanty
13	PAF25-04010003	OIL SEAL, DRIVE SHAFT	4
14	PAT40-04000008	BIG WASHER	1
15	PAF60-04010000	DRIVE SHAFT ASSY	1
16	PAF25-04000015	SEMICIRCULAR KEY	1
17	PAT40-04000027	BEARING	1
18	PAT40-04000003-1	SHIM(T: 0.10mm)	
18	PAT40-04000003-2	SHIM(T: 0.12mm)	
18	PAT40-04000003-3	SHIM(T: 0.15mm)	
18	PAT40-04000003-4	SHIM(T: 0.18mm)	
18	PAT40-04000003-5	SHIM(T: 0. 30mm)	
18	PAT40-04000003-6	SHIM(T: 0. 40mm)	
18	PAT40-04000003-7	SHIM(T: 0. 50mm)	
19	PAT40-04000002	BUSHING, NYLON	1
20	PAT40-04000026	BEARING	1
21	PAT85-04000011	OIL SEAL,CAM SHAFT 9x19x5	1
22	PAF60-04000101	COVER, SHIFTING CAM	1
23	PAJASOF40431-035	O-RING	1
24	PAJASOF40419-007	O-RING BOLT	1
25	PAGB/T896-8	CIRCLIP 8	1
26	PA60-04000004	SHIFTING CAM	1
27	PAF4-03000023	PLUG, GEAR BOX	1
28	PAF4-03000024	GASKET, GEAR BOX PLUG	2

BOAT-parts.se

Nº	Ref.	Description	Quanty
29	PAGB/T889.1-M5	NUT, LOCKING M5	1
30	PAT40-04000023	WATER INLET B	1
31	PAF25-04000031	PLUG, DRAIN	1
32	PAF60-04000001	LOWER CASING	1
33	PAT40-04000006	NUT, PINLON	1
34	PAF60-04000002	PINION	1
35	PAT40-04000022	WATER INLET A	1
36	PAGB/T820-M5x30	SCREW, PAN HEAD M5X30	1
37	PAF60-04000003	SHIFTING CAM	1
38	PAT40-04000004-1	SHIM (T:0.10 mm)	
38	PAT40-04000004-2	SHIM (T:0.12 mm)	
38	PAT40-04000004-3	SHIM (T:0.15 mm)	
38	PAT40-04000004-4	SHIM (T:0.18 mm)	
38	PAT40-04000004-5	SHIM (T:0.30 mm)	
38	PAT40-04000004-6	SHIM (T:0.40 mm)	
38	PAT40-04000004-7	SHIM (T:0.50 mm)	
39	PAKOYOHI-CAP332/32	ROLLER BEARING 332/32	1
40	PAF60-04000600	FORWARD GEAR ASSY	1
41	PAF60-04020005	PLUNGER, SHIFTING	1
42	PAT36-03000403	SPACER, CLUTCH	1
43	PAF60-04020002	SPRING, CLUTCH	1
44	PAF60-04020003	CLUTCH	1

Nº	Ref.	Description	Quanty
45	PAT40-04050004	PIN, CLUTCH	1
46	PAT40-04050005	ANNULAR SPRING, CLUTCH	1
47	PAF60-04020001	PROPELLER SHAFT	1
48	PAF60-04020000	PROPELLER SHAFT ASSY	1
49	PAT40-04050007	WASHER, REVERSE GEAR	1
50	PAF60-04000500	REVERSE GEAR	1
51	PAT40-04060005-L	SHIM (T: 0.10 mm)	
51	PAT40-04060005-2	SHIM (T: 0.12 mm)	
51	PAT40-04060005-3	SHIM (T: 0.15 mm)	
51	PAT40-04060005-4	SHIM (T: 0.18 mm)	
51	PAT40-04060005-5	SHIM (T: 0.30 mm)	
51	PAT40-04060005-6	SHIM (T: 0.40 mm)	
51	PAT40-04060005-7	SHIM (T: 0.50 mm)	
52	PAT40-04000025	BEARING	1
53	PAF60-04030000	COVER ASSY, LOWER CASING	1
54	PAT40-04060002	O-RING A, COVER	1
55	PAT40-04060003	O-RING B, COVER	2
56	PAT40-04060001	COVER, LOWER CASING	1
57	PAT40-04000028	BEARING	1
58	PAGB/T97.1-8	WASHER 8	2
59	PAGB/T5783-M8x25	BOLT M8x25	2
60	PAF60-04000000	LOWER CASING ASSY	1

COLA INFERIOR 2 / LOWER CASING & DRIVE 2 / PARTE INFERIORE PIEDE 2

Nº	Ref.	Description	Quanty
1	PAT40-04000203	SEAL	2
2	PAF60-02000007	WATER TUBE	1
3	PAT40-02000002	GUIDE BUSHING, WATER PIPE	1
4	PAT40-04000204	NYLON BUSHING, WATER PIPE	1
5	PAT40-04000014	WATER ENVELOP	1
6	PAT40-04000013	PLATE, WATER ENVELOP	1
7	PAGB/T5782-M8x35	BOLT, HEXAGON M8X35	1
8	PAGB/T93-8	WASHER, SPRING 8	2
9	PAGB/T97.1-8	WASHER 8	3
10	PAF15-00000006	PIN, DOWEL	2
11	PAGB/T97.1-10	WASHER 10	4
12	PAF40-02000010	BOLT M10x1.25x40	4
13	PAGB/T5782-M8x65	BOLT M8x65	1
14	PAGB/T5783-M8x25	BOLT M8x25	1
15	PAT40-00000010	ANODE	1
16	PAT40-00000009	ANODE A, LOWER CASING	1
17	PAT40-04000018	SPACER, PROPELLER	1
18	PAT40-04070000	PROPELLER ASSY	1
19	PAT40-04000019	BUSH A, PROPELLER	1
20	PAT40-04000020	BUSH B, PROPELLER	1
21	PAT40-04000021	NUT	1
22	PAGB/T91-3.2x25	PIN,COTTER Ø3.2X25	1

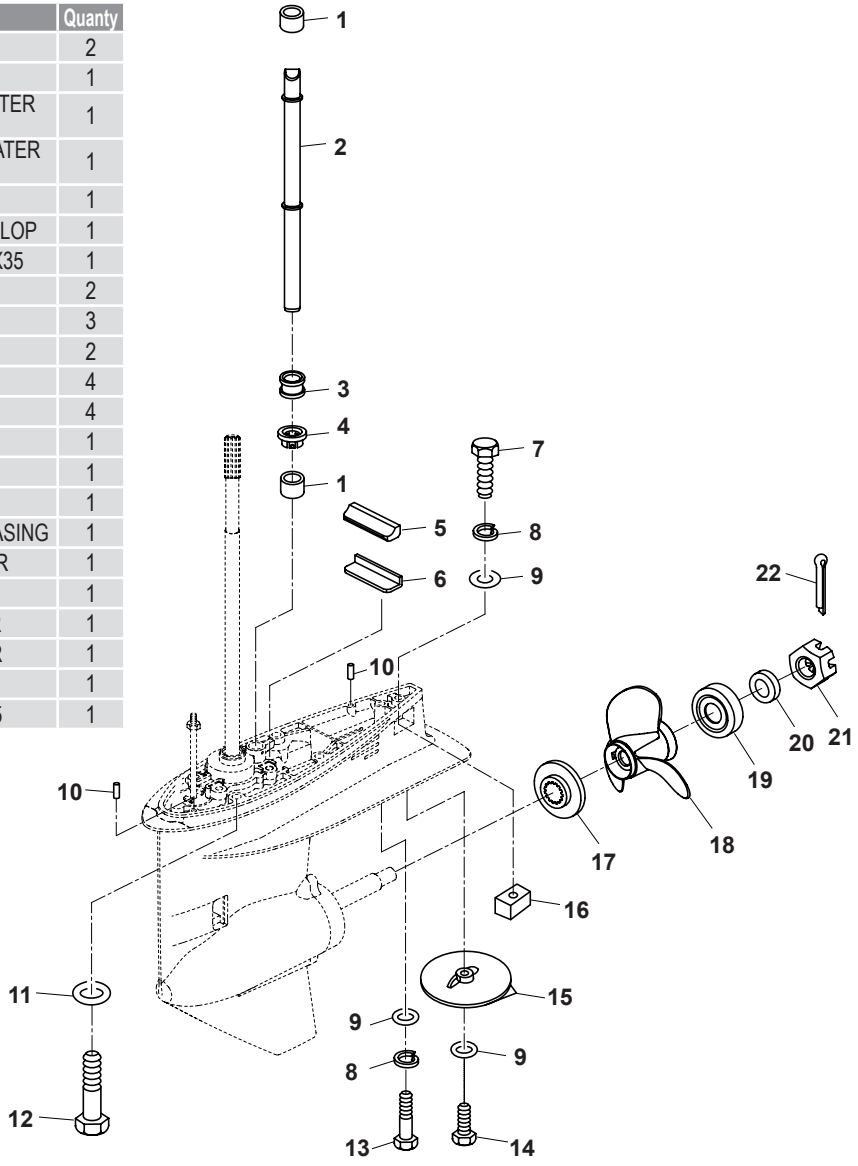

BOAT-parts.se

RECAMBIOS MARINOS S.L.

CAJA DE MANDOS / CONTROL BOX ASSY / SCATOLA COMANDI

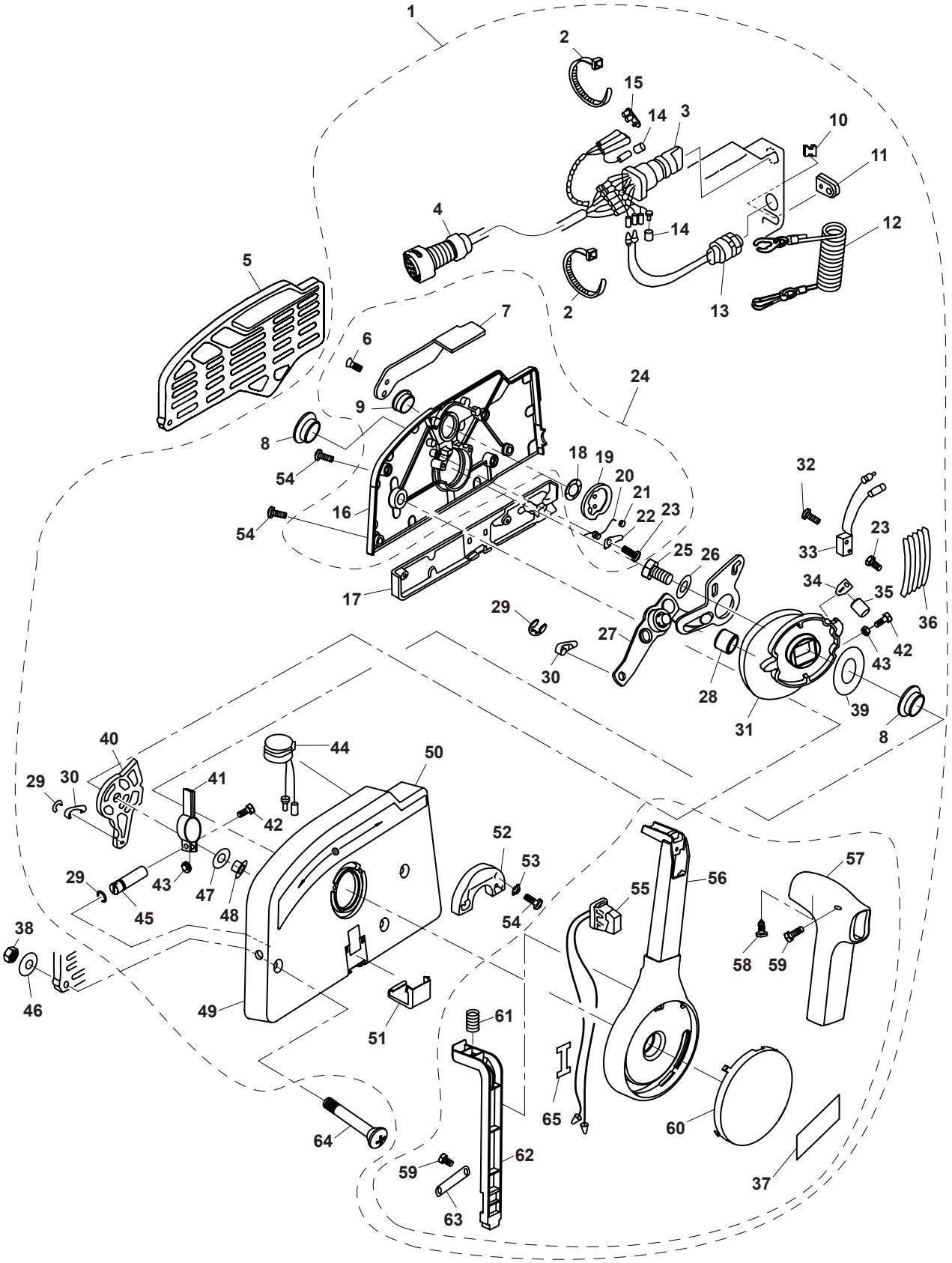

BOAT-parts.se

Nº	Ref.	Description	Quanty
1	PAF40-13000000EI	CONTROL BOX ASSY	1
2	PAHT2.5x60	CLAMP	2
3	PAF40-13000200EI	STARTING SWICH ASSY	1
4	PAF40-08010100EI	CONTROL CABLE	1
5	PAF15-11000002W	PLATE,CONTROL BOX	1
6	PAGB/T819.2-M5x12	SCREW PAN HEAD M5X12	2
7	PAF15-13020007W	THROTTLE HANDLE,INCHING	1
8	PAF15-13000005W	BUSH, CAM	2
9	PAF15-13020006W	BUSH, HANDLE	1
10	PAF15-11000001W	BLOCK, RUBBER	1
11	PAF15-13000014W	JACKET, CABLE	1
12	PAF4-01090401	STOPER, HANG ROPE ASSY	1
13	PAF15-13000400W	ENGINE STOP SWICH ASS'Y	1
14	PAF15-13000203W	INSULATED PLUG "B"	2
15	PAF15-13000202W	INSULATED PLUG "A"	1
16	PAF15-13020001W	COVER, CONTROL BOX	1
17	PAF15-13000013W	SMALL COVER, CONTROL BOX	1
18	PAF15-13020005W	WASHER "B", WAVE	1
19	PAF15-13020100W	LOCKED DISK ASSY	1
20	PAF15-13020002W	TORSION SPRING	1
21	PAF15-13020003W	EACH LOCKED PULLEY	1
22	PAF15-13020004W	PLATE,PULLEY SPRING	1
23	PAGB/T818-M4x6	BOLT	2
24	PAF15-13020000W	COVER ASSY, CONTROL BOX	1
25	PAGB/T5783-M8x30	BOLT M8X30	1
26	PAGB/T97.1-8	WASHER 8	1
27	PAT20-13000500W	MACHINE, CONTROL ACCELEROGRAPH	1
28	PAF15-13000007W	WASHER	1
29	PAGB/T896-6	CIRCLIP 6	3
30	PAF25-07000007W	CONTROL CABLE TIE IN "B"	2
31	PAF15-13000002W	CAM MECHANISM	1
32	PAGB/T818-M3x14	SCREW M3x14	2
33	PAF15-13000800W	JIGGLE SWITCH	1
34	PAF15-13000003W	PLATE	1
35	PAF15-13000004W	PULLEY	1
36	PAF15-13000001W	SHIFT SPRING PLATE "B"	5
37	PAF15-12000016W	MARK 16	1
38	PAGB/T6170-M6	BOLT M6	3
39	PAF15-13000008W	WEARABLE PLATE, CAM MACHANISM	1
40	PAF15-13000700W	SHIFT SWING LINK	1
41	PAF15-13000601W	ADJUSTER FASTNESS ASSY	1
42	PAGB/T5783-M5x25	BOLT M5X25	2
43	PAGB/T6170-M5	NUT M5	2
44	PAF15-13000300W	BUZZER ASSY	1
45	PAF15-13000602W	ADJUSTER PIN	1
46	PAGB/T5287-6	WASHER, OUTSIZE 6	3
47	PAF15-13000006W	WEARABLE PLATE	1
48	PAF15-13000011W	BUSH, SHIFT SWING LINK	1
49	PAF15-13000012W	BRACKET, CONTROL BOX	1
50	PAF15-12000013W	MARK 13	1
51	PAF15-13000015W	COVER, WATERPROOF	1
52	PAF15-13010010W	BLOCK, CONTROL HANDLE	1
53	PAGB/T956.1-5	WASHER, LOCKED 5	2
54	PAGB/T819.2-M5x18	SCREW, PAN HEAD M5X18	7
55	PAE4-10040100W	SWITCH ASSY, TILT	1
56	PAF15-13010001W	CONTROL HANDLE	1
57	PAF15-13010002W	CONTROL HANDLEBAR	1
58	PAGB/T84.5-ST4.8x12	SCREW, PAN HEAD ST4.8X12	1
59	PAGB/T818-M4x10	SCREW, PAN HEAD M4X10	3
60	PAF15-13010009W	COVER, CONTROL HANDLE	1
61	PAF15-13010005W	SPRING, COMPRESSION	1
62	PAF15-13010004W	PART, ORIENTATION CONTROL	1
63	PAF15-13010008W	PLATE, ORIENTATION PART	1
64	PAGB/T820-M6x90	SCREW, PAN HEAD M6X90	3
65	PAE4-07020015W	CHAFING PLAATE, WIRE	1

CARTER / OIL PAN / COPPA L'OLLIO

Nº	Ref.	Description	Quanty
1	PAF60-05000021	OIL DIPSTICK	1
2	PAF60-02010003	GASKET, EXHAUST MANIFOLD SEAT	1
3	PAF60-02000005	GUIDE RUBBER, A	1
4	PAF60-02000006	GUIDE RUBBER, B	1
5	PAF60-02010006	OIL SUMP	1
6	PAGB/T97.1-8	WASHER 8	1
7	PAGB/T5783-M18x30	NUT M5x30	1
8	PAF15-04000003	GASKET	1
9	PAF15-04000002	BOLT, OIL DRAIN	1
10	PAF60-02000009A	JACKET, OIL DRAIN	1
11	PAF15-00000006	PIN, DOWEL	1
12	PAF60-02010004	BRACKET, COARSE STRAINER	1
13	PAJASOF40424-012	O RING 12.5x2.4	1
14	PAF60-02010005	BRACKET, COARE STRAINER	1
15	PAGB/T97.1-6	WASHER, PLAIN 6	1
16	PAGB/T5783-M6x25	HEXAGON BOLT M6x25	1
17	PAGB/T5782-M8x80	BOLT M8X80	1

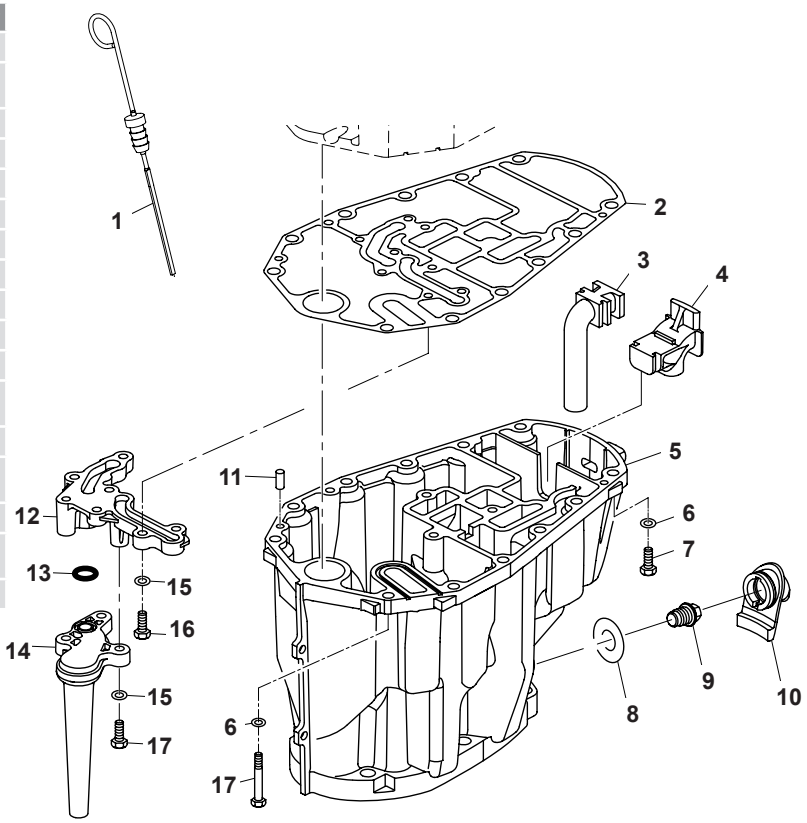

BOAT-parts.se

RECAMBIOS MARINOS S.L.

BOMBA DE ACEITE ELÉCTRICA / ELECTRIC OIL PUMP / POMPA OLIO ELLETTRICA

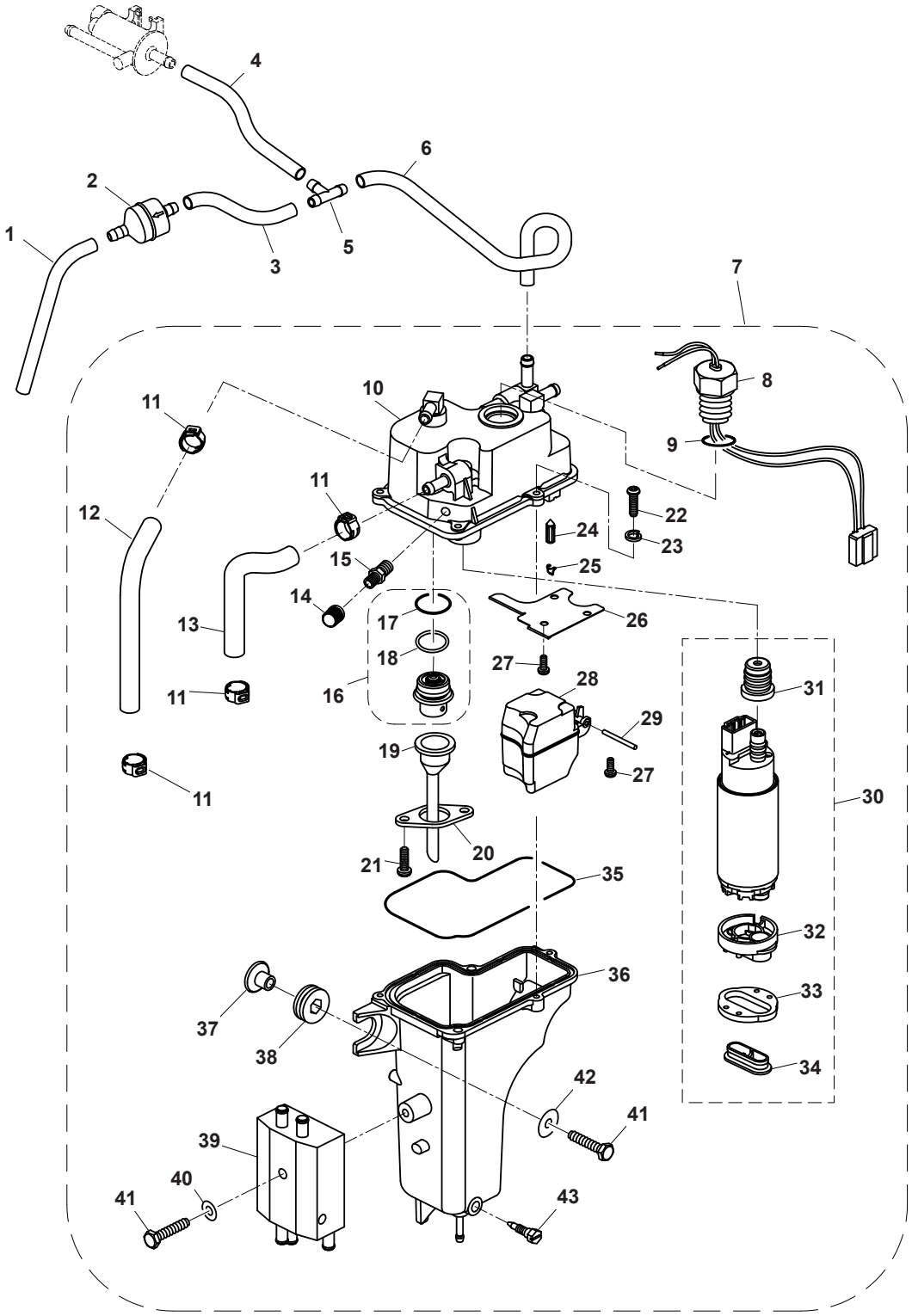

Nº	Ref.	Description	Quanty
1	**PAF60-05000025**	AIR PIPE C 5x10x260	1
2	**PAT5-04000200**	CHECK VALVE	1
3	**PAF60-05000019**	AIR PIPE C 5x10x60(EPA)	1
4	**PAF60-05000016**	AIR PIPE B 5x10x270	1
5	**PAF60-05000054**	PLASTIC THREE WAY 6.5	1
6	**PAF60-05000053**	FUEL PIPE	1
7	**PAF40-05100000EI**	ELECTRIC FUEL PUMP ASSY	1
8	**PAF40-05010400EI**	JOINT ASSY, FUEL PUMP	1
9	**PAGB/T3452.1-15.8x3.1**	O-RING 15.8x3.1	1
10	**PAF40-05100100EI**	BODY ASSY, FUEL PUMP	1

Nº	Ref.	Description	Quanty
11	**PAS7133-13.3**	SINGLE LUG CLAMP	4
12	**PAF40-05100010EI**	SHAPED TUBE A, FUEL PUMP	1
13	**PAF40-05100004EI**	SHAPED TUBE B, FUEL PUMP	1
14	**PAF40-05100202EI**	CAP, DETECTION VALVE	1
15	**PAF40-05100201EI**	DETECTION VALVE, FUEL PUMP	1
16	**PAF40-05100600EI**	PRESSURE REGULATOR VALVE	1
17	**PAF40-05100601EI**	O-RING, PRESSURE REGULATOR VALVE	1
18	**PAF40-05100600-1EI**	WASHER, PRESSURE REGULATOR VALVE	2

BOAT-parts.se

Nº	Ref.	Description	Quanty
19	**PAF40-05100602EI**	CONDUIT TUBE	1
20	**PAF40-05100603EI**	PALTE, PRESSURE REGULATOR VALVE	1
21	**PAGB/T818-M15x12**	SCREW M5x12	2
22	**PAGB/T818-M4x16**	SCREW M4x16	5
23	**PAGB/T93-4**	WASHER,SPRING	5
24	**PAF40-05100301EI**	NEEDLE VALVE	1
25	**PAF40-05100302EI**	CLAMP SPRING, NEEDLE VALVE	1
26	**PAF40-05100003EI**	BAFFLE PLATE	1
27	**PAGB/T818-M4x8**	BOLT	4
28	**PAF40-05100001EI**	FLOAT	1
29	**PAF40-05100002EI**	PIN, FLOAT	1
30	**PAF40-05100500EI**	FUEL PUMP ASSY	1

Nº	Ref.	Description	Quanty
31	**PAF40-05100501EI**	RUBBER SLEEVE, FUEL PUMP	1
32	**PAF40-05100504EI**	PADDING BLOCK, FUEL PUMP	1
33	**PAF40-05100503EI**	RUBBER PAD, FUEL PUMP	1
34	**PAF40-05100502EI**	FILTER NET, FUEL PUMP	1
35	**PAF40-05100704EI**	SEAL, FUEL CAP	1
36	**PAF40-05100701EI**	FUEL CAP, ELECTRIC PUMP	1
37	**PAF25-05090005**	BUSH, IGNITION	3
38	**PAF25-05090004**	BUSH, DAMPING	3
39	**PAF40-05100800EI**	COOLER, FUEL	1
40	**PAGB/T97.1-6**	WASHER, PLAIN 6	1
41	**PAGB/T5783-M6x25**	HEXAGON BOLT M6x25	4
42	**PAGB/T96-6**	LARGE WASHER 6	3
43	**PAF40-05100703EI**	DRAIN BOLT, FUEL CUP	1

BOMBA DE ACEITE MANUAL
MANUAL OIL PUMP
POMPA OLIO MANUALE

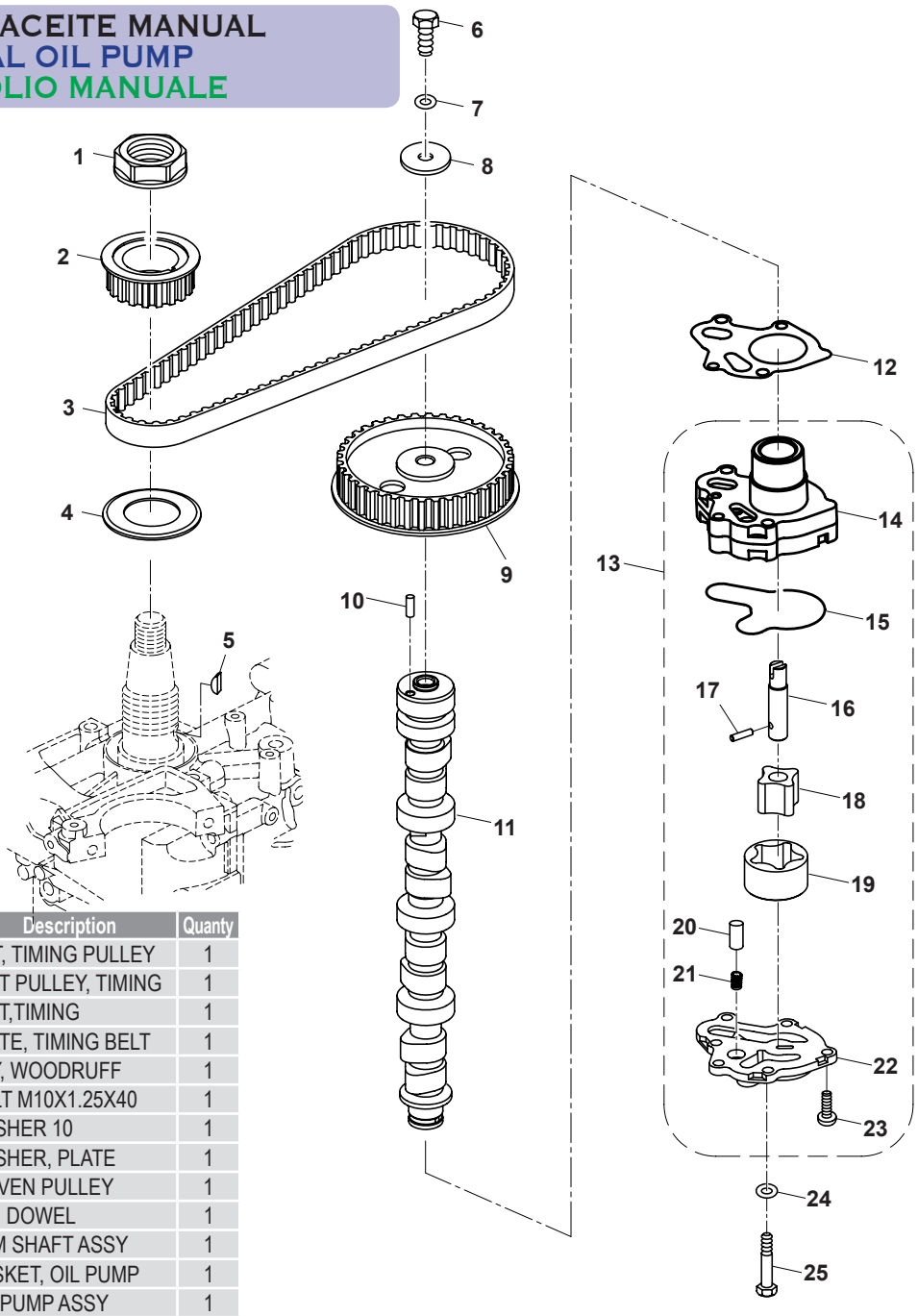

Nº	Ref.	Description	Quanty
1	**PAF40-05000007**	NUT, TIMING PULLEY	1
2	**PAF25-05000021**	BELT PULLEY, TIMING	1
3	**PAF25-05000023**	BELT,TIMING	1
4	**PAF40-05000008**	PLATE, TIMING BELT	1
5	**PAF4-04000019**	KEY, WOODRUFF	1
6	**PAGB/T5785-M10x1.25x40**	BOLT M10X1.25X40	1
7	**PAGB/T97.1-10**	WASHER 10	1
8	**PAF25-05050018**	WASHER, PLATE	1
9	**PAF40-05040006**	DRIVEN PULLEY	1
10	**PAF25-05050016**	PIN, DOWEL	1
11	**PAF60-05020200**	CAM SHAFT ASSY	1
12	**PAF40-05040407**	GASKET, OIL PUMP	1
13	**PAF40-05040400**	OIL PUMP ASSY	1
24	**PAGB/T97.1-6**	WASHER, PLAIN 6	4
25	**PAGB/T5782-M6x40**	BOLT M6X40	4

BOAT-parts.se

RECAMBIOS MARINOS S.L.

DEPÓSITO EXTERNO / OUTER FUEL TANK / SERBATOIO ESTERNO

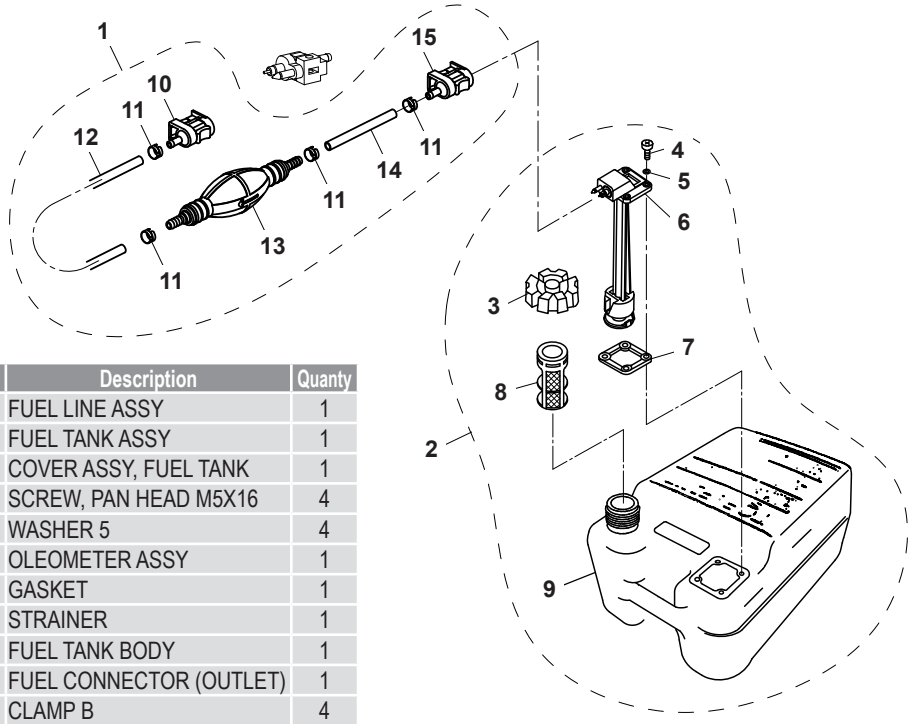

Nº	Ref.	Description	Quanty
1	PAF15-09000000	FUEL LINE ASSY	1
2	PAF15-10000000	FUEL TANK ASSY	1
3	PAF15-10010000	COVER ASSY, FUEL TANK	1
4	PAGB/T818-M5X16	SCREW, PAN HEAD M5X16	4
5	PAGB/T97.1-5	WASHER 5	4
6	PAF15-10020000	OLEOMETER ASSY	1
7	PAF15-10000003	GASKET	1
8	PAF15-10000002	STRAINER	1
9	PAF8-10000001	FUEL TANK BODY	1
10	PAF15-09020000	FUEL CONNECTOR (OUTLET)	1
11	PAF15-09000003	CLAMP B	4
12	PAF15-09000001	FUEL PIPE A 10x6x2080	1
13	PAF15-09030000	PRIMP BULB ASSY	1
14	PAF15-09000002	FUEL PIPE B 10x6x850	1
15	PAF15-09010000	FUEL CONNECTOR (INLET)	1

CIRCUITO COMBUSTIBLE
FUEL COMMON RAIL
CIRCUITO DI CARBURANTE

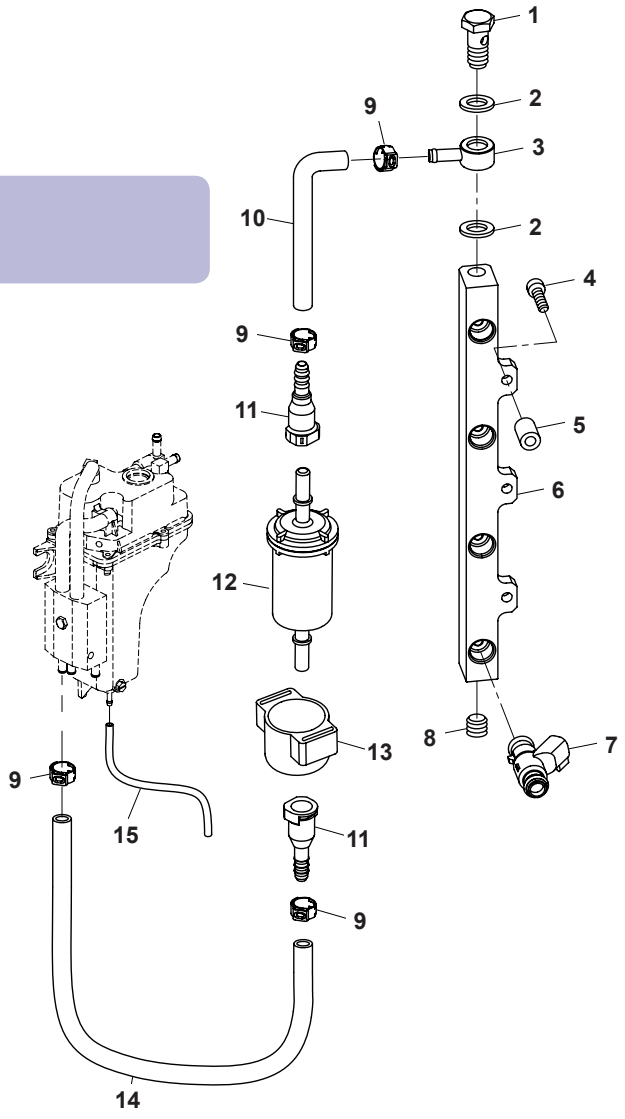

Nº	Ref.	Description	Quanty
1	PAF40-05000046EI	BOLT, ADAPTER	1
2	PAGB/T982-12	COMPOUND SEAL WASHER 12	2
3	PAF40-05000045EI	ADAPTER, COMMON RAIL	1
4	PAGB/T70.1-M6x35	INNER HEXAGON BOLT M6x35	3
5	PAF40-05000044EI	BUSHING, COMMON RAIL	3
6	PAF60-05000024	COMMON RAIL, FUEL	1
7	PAF40-05090300EI	FUEL INJECTOR	4
8	PAF15-07010004	BLOCK, CYLINDER 1/8"	1
9	PA7133-13.3	CLAMP 13.3	4
10	PAF40-05000021EI	FUEL PIPE B	1
11	PAF40-05000040EI	JOINT A, FUEL FILTER	2
12	PAF40-05091100EI	FUEL FILTER	1
13	PAF25-07150301W	RELAY JACKET	1
14	PAF60-05000008	FULE PIPE C 6x12.5x780(EPA)	1
15	PAF40-05100511EI	DRAIN PIPE, FUEL PUMP	1

BOAT-parts.se

TILT HIDRÁULICO 1 / HYDRAULIC TILT 1 / TILT IDRAULICO 1

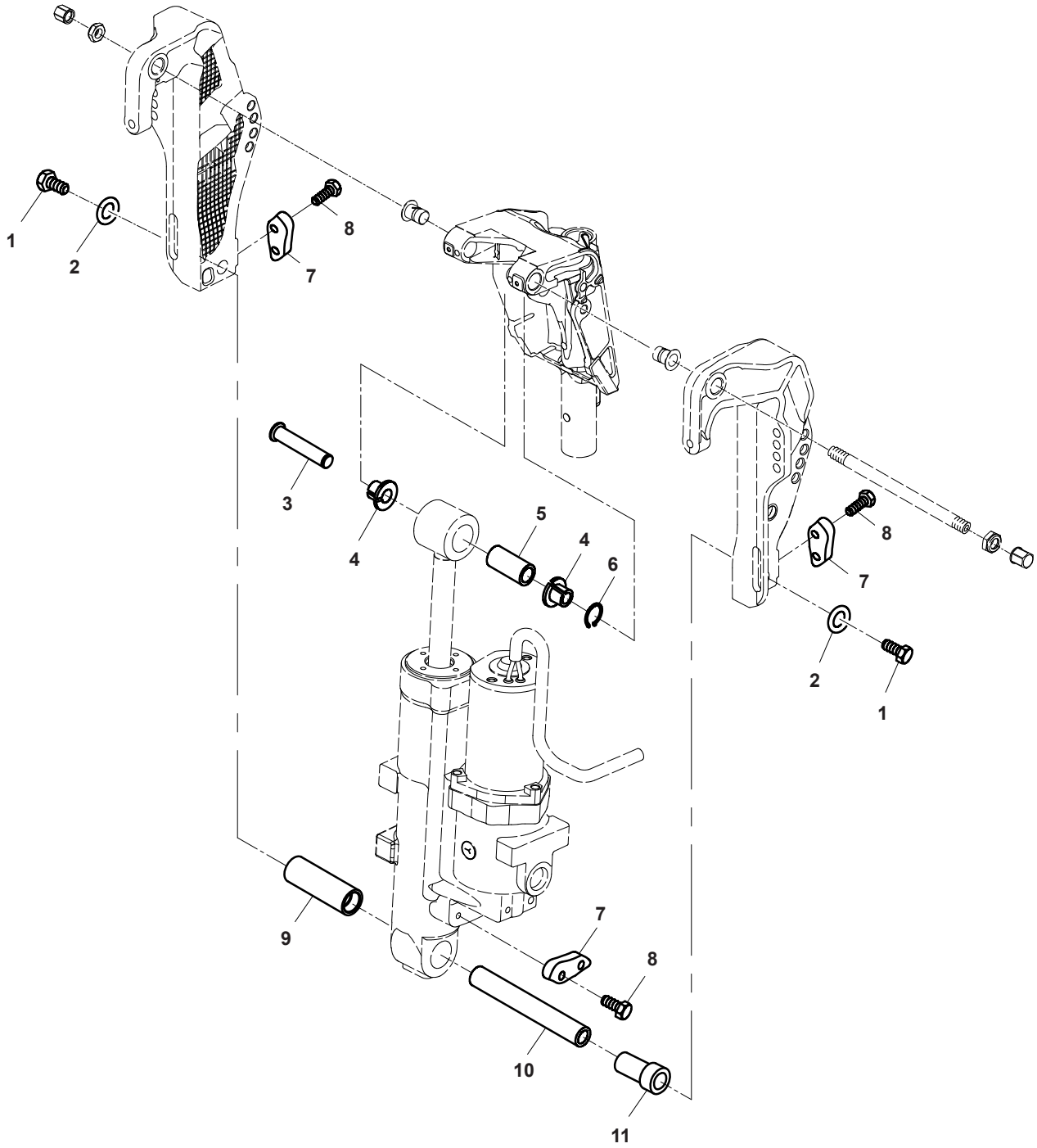

Nº	Ref.	Description	Quanty
1	**PAGB/T5785-M10x1.25x30**	BOLT M10x1.25x30	2
2	**PAF60-00000015**	WASHER 10	2
3	**PAT85-00000016**	PIN UPPER SHOCK MOUNT	1
4	**PAT85-00000017**	BUSH A	2
5	**PAT85-01010007**	BUSH	1
6	**PAGB/T894.1-18**	CIRCLIP 18	1
7	**PAE10-01010008**	ANODE	3
8	**PAGB/T5783-M6x25**	HEXAGON BOLT M6x25	6
9	**PAF60-00000012**	BUSH A	1
10	**PAF60-00000011**	PIN	1
11	**PAF60-00000013**	BUSH B	1

RECAMBIOS MARINOS S.L.

BOAT-parts.se

TILT HIDRÁULICA 2 / HYDRAULIC TILT 2 / TILT IDRAULICO 2

Nº	Ref.	Description	Quanty
1	**PAF60-06000000**	HYDRAULIC TILT ASSY	1
2	**PAF60-06010000**	PISTON ASSY	1
3	**PAF60-06010100**	SHAFT OF PISTON ASSY	1
4	**PAF60-06010003**	OIL SEAL 17x25x5	1
5	**PAF60-06010002**	NUT	1
6	**PAGB/T3452.1-16.8x2.65**	O RING 16.8x2.65	2
7	**PAJISFG46**	O RING 45.5x2	1
8	**PAT85-06010009**	SCREW	1
9	**PAGB/T3452.1-9x2.2**	O-RING 9x2.2	1
10	**PAF60-06030000**	MOTOR ASSY	1
11	**PAGB/T70.1-M5x20**	SCREW M5x20 (BLACK)	3
12	**PAJASOF40431-065**	O RING 64x3.1	1
13	**PAT85-06020015**	O-RING 17.5x2.65	1
14	**PA60-06000005**	BODY, MANUAL VALVE	1
15	**PAGB/T893.1-20**	RING, SNAP CIRCLIP 20	1
16	**PAF60-06000010**	MOTOR LINK	1

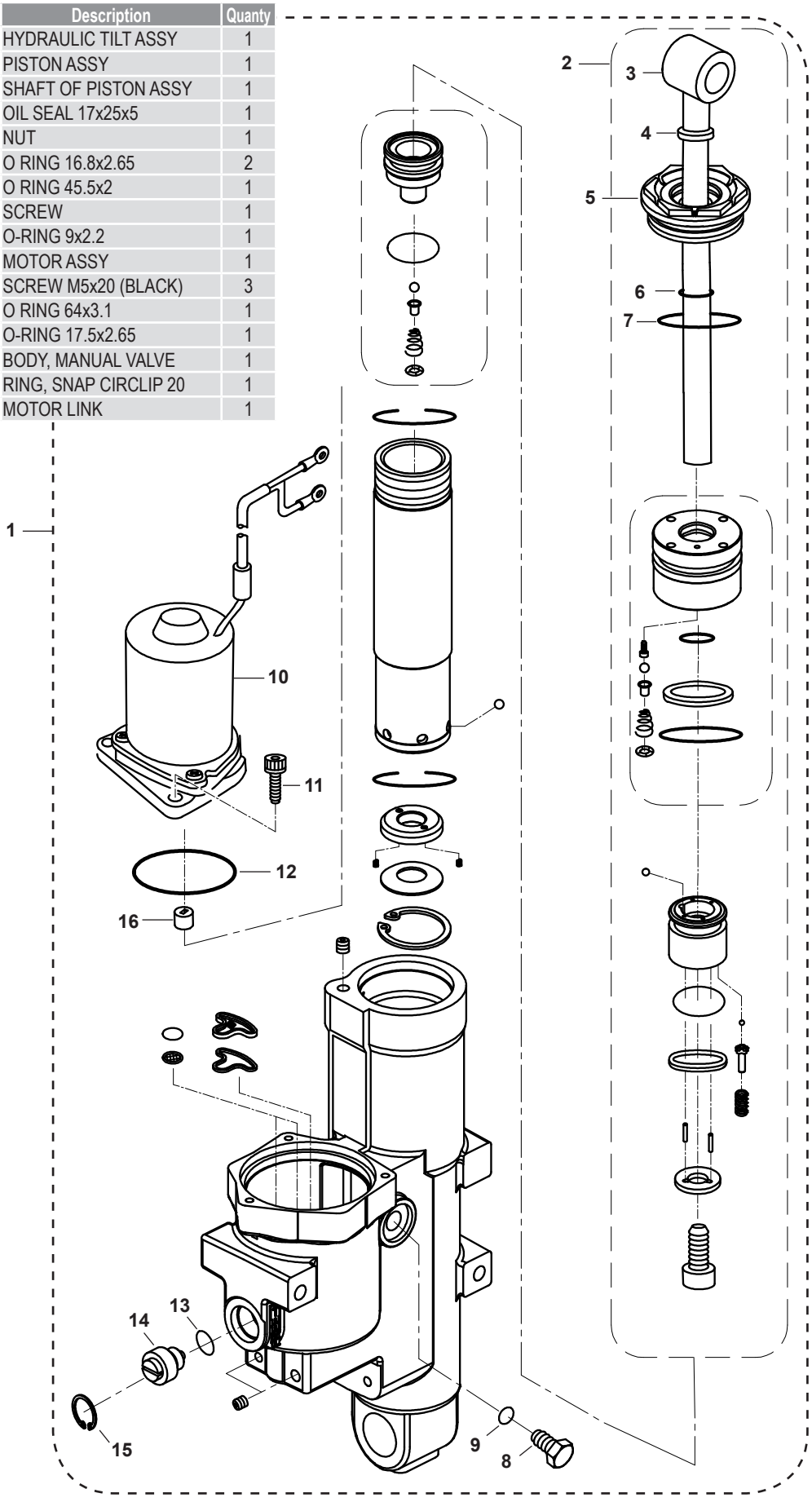

BOAT-parts.se

VÁLVULA / VALVE / VALVOLA

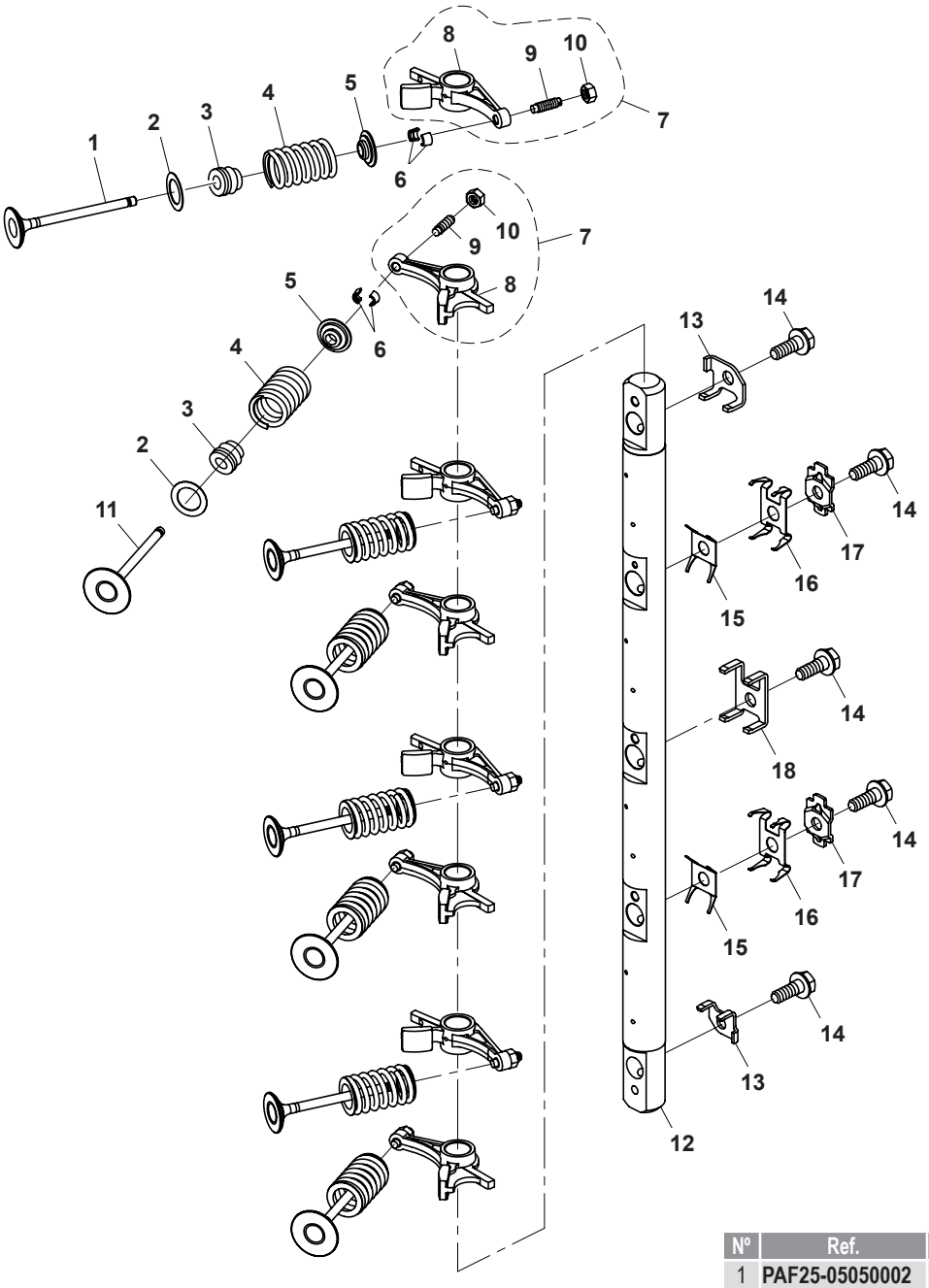

Nº	Ref.	Description	Quanty
1	**PAF25-05050002**	VALVE, EXHAUST	4
2	**PAF25-05050003**	SEAL, VALVE SPRING	8
3	**PAPS2700.04.03**	SEAL, VALVE STEM	8
4	**PAF25-05050005**	SPRING, VALVE	8
5	**PAF15-07040006**	RETAINER, VALVE SPRING	8
6	**PAF15-07040007**	COTTER, VALVE	16
7	**PAF25-05050300**	ROCKET ASSY	8
8	**PAF25-05050301**	ROCKET	8
9	**PAF15-07040303**	SCREW, VALVE ADJUSTING	8
10	**PAF15-07040304**	NUT	8
11	**PAF25-05050001**	VALVE, INTAKE	4
12	**PAF60-05020001**	ROCKER SHAFT	1
13	**PAF25-05050009**	PLATE A, BOLT STOPPER	2
14	**PAF25-05050019**	BOLT	5
15	**PAF40-05040002**	SUPPORTING PLATE, SPRING PLATE	2
16	**PAF25-05050011**	SPRING	2
17	**PAF25-05050012**	PLATE B,BOLT STOPPER	2
18	**PAF40-05040003**	FIXED PLATE B, ROCKER SHAFT	1

RECAMBIOS MARINOS S.L.

BOAT-parts.se

WWW.RECAMBIOSMARINOS.ES

BARCELONA

Jocelyn Bell, 26
Pol. Ca n'Alemany
08840 Viladecans (Barcelona)
Tel. 902 10 85 85 - 93 633 34 80
Fax 93 662 66 59

International
phone: (+34) 93 662 66 55
Fax (+34) 93 662 66 59

info@recambiosmarinos.es
www.recambiosmarinos.es

GIRONA

C/ Gironés, 5
Pol. Ind. El Plà
17486 Castelló d'Empúries (Girona)
Tel. 972 158 809
Fax 972 250 886

girona@recambiosmarinos.es

CANARIAS

Avda. Los Majuelos, 14
38108 La Laguna (Tenerife)
Tel. (+34) 922 621 499
Móvil 628 592 042

canarias@recambiosmarinos.es

ITALIA

RECMAR SRL
Via Israele 10 H
Zona Industriale Settore 7
07026 Olbia (OT)

Tel. (+39) 0789 51962
Fax (+39) 0789 600177
sales@recmar.it

BOAT-parts.se